YESHIVA NEW ACADEMY BUILDING
PRELIMINARY AND FINAL SITE PLAN APPROVAL

BLOCK: 134 – LOT: 1
21 ROCKVIEW AVENUE, BOROUGH OF NORTH PLAINFIELD,
SOMERSET COUNTY, NEW JERSEY

INDEX OF DRAWINGS

DWG.	TITLE	PREPARED BY
SP-100.00	TITLE SHEET	E2PM
SP-101.00	GENERAL NOTES AND 200' PROPERTY OWNER'S LIST	E2PM
SP-102.00	EXISTING CONDITIONS AND DEMOLITION PLAN	E2PM
SP-103.00	SITE AND UTILITY PLAN	E2PM
SP-104.00	GRADING AND DRAINAGE PLAN	E2PM
SP-105.00	LANDSCAPING PLAN	E2PM
SP-106.00	LANDSCAPING DETAILS	E2PM
SP-107.00	LIGHTING PLAN	E2PM
SP-108.00	LIGHTING DETAILS	E2PM
SP-109.00	SOIL EROSION AND SEDIMENT CONTROL PLAN	E2PM
SP-110.00	PROPOSED FENCE PLAN	E2PM
C-100.00	SOIL EROSION AND SEDIMENT CONTROL DETAILS	E2PM
C-101.00	CONSTRUCTION DETAILS	E2PM
C-102.00	CONSTRUCTION DETAILS	E2PM
C-103.00	CONSTRUCTION DETAILS	E2PM

REQUIRED PERMITS

- SOIL EROSION & SEDIMENT CONTROL PERMIT
- NJPDES GENERAL PERMIT FOR STORMWATER DISCHARGE ASSOCIATED WITH CONSTRUCTION ACTIVITY - 5G3
- NEW JERSEY AMERICAN WATER (NJAW)

REFERENCE
SOMERSET COUNTY TAX MAP GIS DATABASE

SITE LOCATION MAP

0 100' 200' 400'
SCALE: 1"=200'

SUBJECT PROPERTY

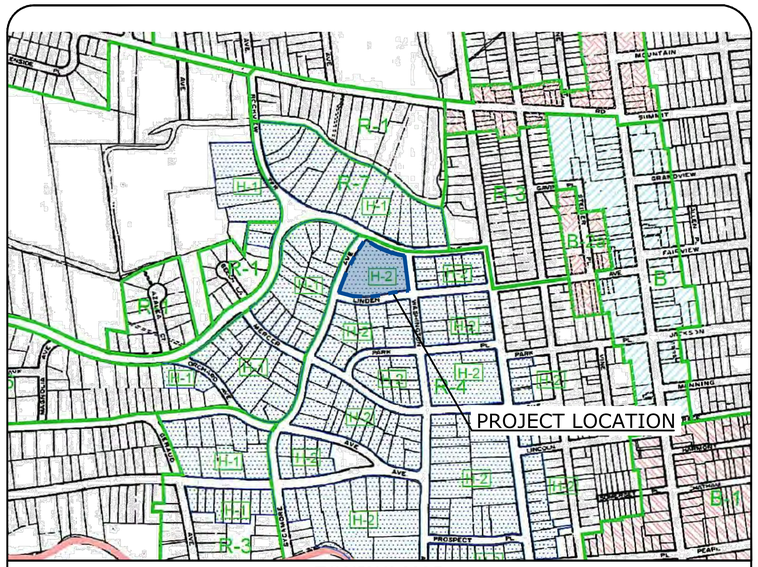

ZONING MAP
SCALE: NTS

I CONSENT TO THE FILING OF THESE DRAWINGS WITH THE PLANNING BOARD OF THE BOROUGH OF NORTH PLAINFIELD

OWNER:
YESHIVA TIFERES BORUCH, INC.
112 LINDEN AVENUE
NORTH PLAINFIELD, NJ 07060

APPLICANT:
YESHIVA TIFERES BORUCH, INC.
112 LINDEN AVENUE
NORTH PLAINFIELD, NJ 07060

I HAVE REVIEWED THESE DRAWINGS AND CERTIFY THAT IT MEETS ALL CODES AND ORDINANCES UNDER MY JURISDICTION.

BOROUGH ENGINEER DATE

APPROVED BY THE PLANNING BOARD OF THE BOROUGH OF NORTH PLAINFIELD

CHAIRMAN DATE

SECRETARY DATE

PROJECTED WATER DEMAND

UNIT	TOTAL NUMBER OF UNITS	DAILY SEWER FLOW PER NJAC 7:10-12.6	TOTAL FLOW
DINING HALL (WITH CAFETERIA)	79 STUDENTS	15 GPD/STUDENT	1,185 GPD
		TOTAL FLOW	1,185 GPD*

* NO NJDEP WEP PERMIT REQUIRED. ADDITIONALLY THERE IS NO INCREASE IN STUDENT POPULATION SO AS SUCH THERE IS NO INCREASE IN WATER DEMAND FOR THE SITE, BUT THIS CALCULATION WAS PREPARED IN ACCORDANCE WITH N.J.A.C. 7:10-12.6.

PARKING CALCULATION

SECTION 22-117.2b15 - UNLISTED USE:
- ONE SPACE FOR EACH 200 SQUARE FEET OF GROSS FLOOR AREA UNLESS WAIVED BY THE PLANNING BOARD
- NO SCHOOL OR DORMITORY USE LISTED IN ORDINANCE
- EXISTING BUILDINGS ON SITE
  - 36,193 GROSS SQUARE FEET
  - REQUIRES 181 PARKING STALLS
- EXISTING STALLS ON SITE: 31 PARKING STALLS
- **PROPOSED STALLS ON SITE: 27 PARKING STALLS (LOSE 4 STALLS BASED ON PROPOSED DEVELOPMENT)**
- PROPOSED BUILDING
  - 11,267 GROSS SQUARE FEET
  - REQUIRES 56 PARKING STALLS
- TOTAL STALLS REQUIRED ON SITE: **237 PARKING STALLS**
- WAIVER REQUESTED BASED ON RESULTS OF TRAFFIC STUDY

LOADING CALCULATION

SECTION 22-117.3 OFF-STREET LOADING SPACE REQUIREMENTS:
- FOR ANY BUILDING OR PREMISES USED FOR COMMERCIAL OR INDUSTRIAL PURPOSES, INDOOR OR OUTDOOR SPACE FOR LOADING AND UNLOADING GOODS AND MATERIALS SHALL BE PROVIDED ON PREMISES WHENEVER THE AGGREGATE FLOOR AREA USED FOR SUCH PURPOSES IS 4,000 SQUARE FEET OR MORE, IN ACCORDANCE WITH THE FOLLOWING SCHEDULE:
  - 4,000 TO 20,000 SQUARE FEET, ONE SPACE
  - 20,000 TO 40,000 SQUARE FEET, TWO SPACES
  - OVER 40,0000 SQUARE FEET, THREE SPACES
- NO OFF-STREET LOADING IS REQUIRED SINCE NO COMMERCIAL OR INDUSTRIAL USE IS PROPOSED.

PROJECTED SANITARY FLOW

UNIT	TOTAL NUMBER OF UNITS	DAILY SEWER FLOW PER NJAC 7:14A-23	TOTAL FLOW
DINING HALL (WITH CAFETERIA)	79 STUDENTS	15 GPD/STUDENT	1,185 GPD
		TOTAL FLOW	1,185 GPD*

* NO NJDEP TWA PERMIT REQUIRED. ADDITIONALLY THERE IS NO INCREASE IN STUDENT POPULATION SO AS SUCH THERE IS NO INCREASE IN SANITARY FLOW OFF SITE, BUT THIS CALCULATION WAS PREPARED IN ACCORDANCE WITH N.J.A.C. 7:14A-23.

BULK REQUIREMENTS

ZONE H-2 - HISTORIC DISTRICT RESIDENCE ZONE

PROPOSED USE: YESHIVA NEW ACADEMY BUILDING (SCHOOL)
BLOCK 134, LOT 1

	NORTH PLAINFIELD ORDINANCE CHAPTER 22	EXISTING (LOT 1)	PROPOSED (LOT 1)
PERMITTED USES	ANY USE PERMITTED IN R-1, R-2, AND R-3 ZONE WHICH INCLUDES STATE ACCREDITED SCHOOLS AND PUBLIC BUILDINGS AND USES OWNED OR OPERATED BY THE BOROUGH OR ITS AGENT OR BY THE BOARD OF EDUCATION; CHURCHES, SYNAGOGUES, AND OTHER RELIGIOUS BUILDINGS AND USES	SCHOOL/RELIGIOUS SCHOOL	SCHOOL/RELIGIOUS SCHOOL
MINIMUM LOT AREA	6,000 SF (WITHIN 115 FEET OF THE FRONT STREET RIGHT-OF-WAY)	96,630 SF	96,630 SF
MINIMUM LOT FRONTAGE (2)	35 FT	207.8 FT	207.8 FT
MINIMUM LOT WIDTH	50 FT AT BUILDING LINE	224.4 FT	224.4
MINIMUM SETBACKS			
FRONT	30 FT	16.2 FT (1)	30.6 FT
SIDE (ONE/COMBINED) (3)	4 FT / 30% OF THE LOT WIDTH	N/A	N/A
REAR (3)	10 FT	N/A	N/A
MAXIMUM BUILDING COVERAGE	30%	22.3% (21,552 SF)	29.6% (28,612 SF)
MINIMUM FLOOR AREA	1,000 SF FOR ONE-STORY AND 750 SQUARE FEET FIRST FLOOR AREA FOR TWO-STORY STRUCTURES	399 SF (EX. 1-STORY FRAME BUILDING) (1)	EXISTING BLDG: 4,361 SF PROPOSED: 7,739 SF (2-STORY BLDG)
MAXIMUM BUILDING STORIES	2-1/2 STORIES or 35 FEET	EXISTING: 3-STORY BUILDING (1)	PROPOSED BLDG: 2 STORIES / 34.67 FT

TABLE KEY

NC	NO CHANGE
NA	NOT APPLICABLE
(1)	PRE-EXISTING NON CONFORMING
(V)	VARIANCE REQUIRED

NOTE:
1. PER SECTION 22-106A.4 OF THE NORTH PLAINFIELD ORDINANCE, IN THE H-2 HISTORIC DISTRICT RESIDENCE ZONE, ALL REQUIRED CONDITIONS OF R-2 RESIDENCE ZONE SHALL BE MET; PROVIDED, HOWEVER, THAT FOR TWO-FAMILY DWELLINGS, ALL REQUIRED CONDITIONS OF R-3 RESIDENCE ZONE SHALL BE MET.
2. THE PROJECT SITE FRONTS ON FOUR (4) STREETS. THE LEAST FRONTAGE IS ALONG WASHINGTON AVENUE.
3. THE PROJECT SITE FRONTS ON FOUR (4) STREETS AND THEREFORE HAS NO SIDE OR REAR YARDS.

PROJECT DESCRIPTION

THE PROPOSED PROJECT CONSISTS OF A TWO-STORY 11,267 GROSS SQUARE FOOT YESHIVA NEW ACADEMIC BUILDING. THE NEW ACADEMIC BUILDING WILL BE LOCATED AT 21 ROCKVIEW AVENUE WHICH ALREADY CONTAINS EXISTING STRUCTURES ON SITE INCLUDING SCHOOL FACILITIES, HOUSING FOR STUDENTS, AND SIX APARTMENTS. THE PROPOSED BUILDING WILL NOT INCREASE ENROLLMENT OR STAFFING AND WILL CONSIST OF A DINING HALL, COMMERCIAL KITCHEN, AND A STUDY HALL AND LECTURE HALL. ADDITIONAL SITE IMPROVEMENTS INCLUDING SIDEWALKS, LIGHTING, LANDSCAPING, AND UTILITY AND STORMWATER MANAGEMENT IMPROVEMENTS.

WAIVERS REQUESTED

- SECTION 22-117.2b15 PARKING STALL REQUIREMENTS WAIVER REQUESTED IN ACCORDANCE WITH TRAFFIC ENGINEERING REPORT

LOT COVERAGE CALCULATIONS

ON-SITE IMPERVIOUS COVERAGE

BUILDING	28,612 SF
CONCRETE & PAVEMENT AREAS	21,506 SF
TOTAL ON-SITE IMPERVIOUS COVERAGE	50,118 SF

ON-SITE PERVIOUS COVERAGE

LAWN & OPEN SPACE	46,512 SF
TOTAL PERVIOUS COVERAGE	46,512 SF

BUILDING COVERAGE

BUILDING = (28,612/ 96,630) X 100 = 29.6%

LOT COVERAGE

LOT COVERAGE = (50,118 / 96,630) X 100 = 51.9%

TOTAL AREA OF DISTURBANCE = 0.54 ACRES

SCHEDULE OF REVISIONS

1.	03/08/2023	REVISED PER HPC MEETING	ENS	CJS

OWNER/APPLICANT
YESHIVA TIFERES BORUCH, INC.
112 LINDEN AVENUE
NORTH PLAINFIELD, NJ 07060

E 2 PROJECT MANAGEMENT LLC

87 HIBERNIA AVENUE
ROCKAWAY, N.J. 07866
PHONE: (973) 299-5200
FAX: (973) 299-5059
www.E2PM.com

THIS DRAWING DOES NOT INCLUDE NECESSARY COMPONENTS FOR CONSTRUCTION SAFETY. ALL CONSTRUCTION WORK SHALL BE PERFORMED IN ACCORDANCE WITH OSHA AND THE CONTRACT ACT OF 1970 AND ALL RULES AND REGULATIONS THERETO APPURTENANT. THIS DRAWING AND THE DESIGN FEATURES OR CONSTRUCTION DISCLOSED ARE PROPRIETARY TO E2 PROJECT MANAGEMENT LLC AND SHALL NOT BE REPRODUCED, ALTERED OR COPIED WITHOUT WRITTEN PERMISSION, SHALL NOT BE USED IN ANY MANNER DETRIMENTAL TO ITS INTEREST AND SHALL BE RETURNED UPON REQUEST.

N.J. ENGINEERING CERTIFICATE OF AUTHORIZATION No. 24GA28118200

I CERTIFY THAT THESE PLANS HAVE BEEN PREPARED UNDER MY SUPERVISION

CHARLES J. STEWART, P.E., P.L.S. N.J. NO. 24GB03588400
REGISTERED PROFESSIONAL ENGINEER AND LAND SURVEYOR

PROJECT NAME

YESHIVA NEW ACADEMY BUILDING

TAX LOT 1
BLOCK 134

21 ROCKVIEW AVENUE
BOROUGH OF NORTH PLAINFIELD
SOMERSET COUNTY, NJ

DRAWING TITLE

TITLE SHEET

CHECKED BY: CS	DRAWN BY: ENS
SCALE: AS NOTED	SHEET NO: 1 OF 15
PROJECT #: P-22-47-01	FIRST ISSUE: 8/24/2022

DRAWING NO.

SP-100.00

GENERAL NOTES

1. BOUNDARY AND TOPOGRAPHIC INFORMATION AND EXISTING UTILITIES SHOWN HEREON WAS TAKEN FROM A MAP PREPARED BY NEWLINES ENGINEERING & SURVEY ENTITLED "BOUNDARY & TOPOGRAPHIC SURVEY BLOCK 134 - LOT 1, 21 ROCKVIEW AVENUE, NORTH PLAINFIELD BOROUGH, SOMERSET COUNTY, NEW JERSEY" DATED DECEMBER 6, 2021.
2. CONTRACTOR SHALL VERIFY THE LOCATION OF EXISTING UTILITIES IN THE FIELD PRIOR TO CONSTRUCTION. THIS SHALL INCLUDE EXCAVATING TEST PITS, IF NECESSARY. CONTRACTOR SHALL CALL FOR UTILITY MARK-OUT PRIOR TO ANY DEMOLITION OR CONSTRUCTION ACTIVITIES.
3. ALL SITE WORK SHALL BE PERFORMED IN ACCORDANCE WITH THE REQUIREMENTS OF THE BOROUGH OF NORTH PLAINFIELD.
4. CONNECTIONS TO EXISTING UTILITIES SHALL BE PERFORMED IN ACCORDANCE WITH THE REQUIREMENTS OF THE UTILITY COMPANY HAVING JURISDICTION.
5. CONTRACTOR SHALL NOTIFY THE OWNER AND ENGINEER OF FIELD CONDITIONS OR CONFLICTS THAT WOULD ADVERSELY IMPACT CONSTRUCTION AS PROPOSED ON THE PLANS.
6. CONTRACTOR SHALL TAKE PRECAUTIONS TO AVOID DAMAGE TO EXISTING IMPROVEMENTS AND VEGETATION INTENDED TO REMAIN.
7. ALL EXISTING ONSITE IMPROVEMENTS SHALL BE REMOVED UNLESS NOTED OTHERWISE.
8. E2 PROJECT MANAGEMENT LLC. ASSUMES NO RESPONSIBILITY FOR THE METHODS, TECHNIQUES OR PROCEDURES OF CONSTRUCTION, FOR SAFETY MEASURES OR PRECAUTIONS RELATED TO CONSTRUCTION, OR ANY FAILURE TO COMPLY WITH APPLICABLE LAWS, REGULATIONS, ORDINANCES OR CODES.
9. ANY STRUCTURES TO BE REMOVED SHALL HAVE EXCAVATIONS BACKFILLED WITH STRUCTURAL FILL AND PROPERLY COMPACTED, AS PER PROJECT SPECIFICATIONS.
10. PER FEMA MAP 34035C0181E, THE SUBJECT PROPERTY DOES NOT CONTAIN ANY LAND WITHIN A DELINEATED FLOOD HAZARD AREA.
11. NO CONSTRUCTION SHALL TAKE PLACE UNTIL A PRE-CONSTRUCTION CONFERENCE HAS BEEN HELD WITH THE BOROUGH ENGINEER. SUCH MEETING SHALL INCLUDE SUCH PERSONNEL AS THE BOROUGH ENGINEER MAY REQUIRE.
12. THE MAXIMUM PERMITTED SLOPE SHALL BE 3 HORIZONTAL TO 1 VERTICAL FOR ALL SITE GRADING.
13. ANY DISTURBED AREA THAT WILL BE LEFT EXPOSED FOR MORE THAN THIRTY (30) DAYS AND NOT SUBJECT TO CONSTRUCTION TRAFFIC SHALL IMMEDIATELY RECEIVE A TEMPORARY SEEDING. IF THE SEASON PROHIBITS TEMPORARY SEEDING, THE DISTURBED AREA WILL BE MULCHED WITH STRAW OR THEN HAY AND TACKED IN ACCORDANCE WITH THE NEW JERSEY STANDARDS. SEE SOIL EROSION AND SEDIMENT CONTROL NOTES FOR SEEDING SPECIFICATIONS.
14. ALL CONSTRUCTION SHOW HEREIN SHALL CONFORM TO MUNICIPAL/COUNTY STANDARD CONSTRUCTION DETAILS AND SPECIFICATIONS AND N.J. DEPT. OF TRANSPORTATION STANDARD SPECIFICATIONS FOR ROAD AND BRIDGE CONSTRUCTION, AS AMENDED, UNLESS SPECIFICALLY SHOWN OTHERWISE HEREIN. IN CASE OF CONFLICT, THE MORE RESTRICTIVE SHALL GOVERN. CONTRACTOR SHALL NOTIFY DESIGN ENGINEER OF ANY QUESTIONS REGARDING CONFLICTS.
15. HANDICAPPED RAMPS AND CURB CUTS WILL BE PROVIDED AT ALL INTERSECTIONS AND PEDESTRIAN CROSSINGS, AS PER DETAILS.
16. ANY DAMAGE TO THE RIGHT-OF-WAY MUST BE REPAIRED/INSTALLED TO EQUAL STANDARDS.
17. ALL IMPROVEMENTS WITHIN THE BOROUGH OF NORTH PLAINFIELD'S RIGHT OF WAY SHALL CONFORM TO THE BOROUGH OF NORTH PLAINFIELD'S STANDARDS.

UTILITY NOTES

1. THE SUBJECT PROPERTY HAD NUMEROUS RESIDENTIAL BUILDINGS. ALL THE HISTORICAL BUILDINGS HAVE BEEN DEMOLISHED. HOWEVER, THE SITE MOST LIKELY HAS SUBSURFACE OBSTRUCTIONS SUCH AS FOUNDATIONS, PITS, SLABS, AND UTILITY LINES. CONTRACTOR SHALL TAKE APPROXIMATE PRECAUTIONS.
2. GAS, ELECTRIC, TELEPHONE, WATER AND CABLE LINES MAY BE INSTALLED BY THE RESPECTIVE UTILITY. THE EXACT LOCATION OF EACH MAIN SHALL BE COORDINATED BY THE OWNER/GENERAL CONTRACTOR AND SUBMITTED TO THE DESIGN ENGINEER FOR REVIEW PRIOR TO INSTALLATION.
3. ALL NEW UTILITIES SHALL BE INSTALLED UNDERGROUND, EXCEPT WHERE OTHERWISE NOTED.
4. EXISTING INLETS SHALL BE RELOCATED AND/OR RESET TO MATCH TO THE NEW CURB LINE WHERE SHOWN.
5. ALL PROPOSED ELECTRICAL TRANSFORMERS SHALL BE LOCATED INSIDE A BUILDING OR ON A CONCRETE SLAB AS PER PSE&G STANDARDS..
6. DESIGN OF ELECTRICAL UTILITIES FROM THE ELECTRICAL POLES TO THE TRANSFORMERS INCLUDING PRIMARY CONDUITS, PULLBOXES, MANHOLES, AND TRANSFORMER VAULTS ARE PENDING PSE&G APPROVAL. PSE&G APPROVAL WILL BE FOUND ON SEPARATE DRAWINGS FROM THIS SET.
7. ALL RCP DRAINAGE PIPE SHALL MEET OR EXCEED THE REQUIREMENTS SPECIFICATION FOR ASTM C76 "STANDARD SPECIFICATION FOR REINFORCED CONCRETE CULVERT, STORM DRAIN, AND SEWER PIPE", LATEST VERSION, IN CONFORMANCE WITH THE FOLLOWING.
   -PIPES WITH COVER EQUAL TO OR LESS THAN 3 FT. SHALL BE CLASS IV PIPE
   -PIPES WITH COVER GREATER THAN 3 FT. SHALL BE CLASS III.
   -ALL PIPES SHALL UTILIZE A CLASS C WALL THICKNESS.
   -ALL PIPE REACHES SHALL BE CONSTRUCTED USING THE SAME CLASS AND WALL THICKNESS PIPE.
8. ALL CATCH BASINS SHALL BE NJDOT TYPE "A", "B" OR "E".
9. CONTRACTOR SHALL COORDINATE FIRE HYDRANT LOCATIONS WITH THE FIRE DEPARTMENT PRIOR TO INSTALLATION. A PLAN OF SAME SHALL BE SUBMITTED TO THE DESIGN ENGINEER.
10. SANITARY SEWER MANHOLE RIMS SHALL BE RESET TO PROPOSED NEW PAVEMENT GRADE AS REQUIRED.
11. EXISTING WATER VALVE AND GAS VALVE BOXES SHALL BE RESET TO PROPOSED NEW PAVEMENT GRADE AS REQUIRED.
12. A MINIMUM HORIZONTAL DISTANCE OF 10 FT OR A MINIMUM OF 18" VERTICAL DISTANCE IS REQUIRED BETWEEN SANITARY SEWER AND POTABLE WATER PIPING. IF EITHER OF THESE DISTANCES CANNOT BE ACHIEVED, THE SANITARY SEWER SHALL BE ENCASED IN CONCRETE AT THE CONFLICT LOCATION.
13. ALL WATER UTILITY INSTALLATIONS SHALL CONFORM TO THE LATEST AMERICAN WATER WORKS ASSOCIATION SPECIFICATIONS. WATER SYSTEMS SHALL BE INSTALLED PER THE NEW JERSEY PLUMBING CODE AND AS PER THE REQUIREMENTS OF AMERICAN WATER WORKS COMPANY.
14. ALL PROPOSED WATER MAINS, LOOPS, AND FIRE AND DOMESTIC WATER SERVICE SIZES SHOWN, WILL BE ADJUSTED AND SIZED BASED UPON THE RESULTS OF FIRE FLOW TESTS AND SUBSEQUENT DESIGN CALCULATIONS TO BE PROVIDED BY OTHERS.
15. SANITARY SEWER AND WATER MAIN DESIGN SHALL BE COORDINATED WITH MEP ENGINEERING DESIGN ONCE IT HAS BEEN DEVELOPED.

SOIL AND WASTE MANAGEMENT

1. SOIL, WASTE, SURFACE WATER, AND GROUNDWATER MANAGEMENT SHALL BE PERFORMED IN ACCORDANCE WITH LOCAL, STATE, AND FEDERAL REGULATIONS.
2. A SITE SPECIFIC HEALTH AND SAFETY PLAN (HASP) SHALL BE PREPARED, SUBMITTED AND IMPLEMENTED BY CONTRACTOR IN ACCORDANCE IN ACCORDANCE WITH ALL APPLICABLE HEALTH AND SAFETY REQUIREMENTS. THE HASP SHALL GOVERN ALL HEALTH AND SAFETY FACETS OF THE PROJECT CONSTRUCTION AND ENCOMPASS THE ACTIVITIES OF ALL PERSONS WHO ENTER THE SITE.
3. THE CONTRACTOR SHALL PROVIDE PROTECTION AND ON-GOING MAINTENANCE OF THE TEMPORARY STOCKPILES OF SOIL AND OPEN EXCAVATIONS TO PREVENT THE INFILTRATION OF STORMWATER, DUSTING, EROSION AND UNAUTHORIZED CONTACT. THE CONTRACTOR SHALL BE RESPONSIBLE FOR THESE PROPER PROTECTION AND MAINTENANCE MEASURES UNTIL COMPLETION OF THE WORK AND ACCEPTANCE BY THE ENGINEER.

STORMWATER AND GROUNDWATER MANAGEMENT DURING SOIL EXCAVATION

1. THE CONTRACTOR SHALL PREPARE AND IMPLEMENT A STORMWATER AND GROUNDWATER MANAGEMENT AND CONTROL PLAN TO MANAGE SURFACE WATER AND GROUNDWATER. THE CONTRACTOR SHALL IDENTIFY ALL REQUIRED PERMITS ON THE MHP AND CONTRACTOR'S PROJECT SCHEDULE ALLOWING ADEQUATE TIME FOR SECURING ALL REQUIRED PERMITS IN TIME FOR CONSTRUCTION.
2. THE CONTRACTOR'S PLAN SHALL SPECIFY METHODS AND EQUIPMENT FOR COLLECTING, PUMPING, TREATING AND DISPOSING OF LIQUIDS GENERATED DURING STORM WATER CONTROL AND DEWATERING; MEASURES TO PREVENT STORM WATER RUN-ON AND RUN-OFF; DEWATERING OF EXCAVATIONS; DECONTAMINATING PERSONNEL AND EQUIPMENT; AND STORING FUELS AND CHEMICALS. THE CONTRACTOR'S PLAN SHALL ALSO IDENTIFY THE APPLICABLE PERMITTING, MONITORING AND REPORTING REQUIREMENTS.
3. STORM AND GROUND WATERS REMOVED FROM EXCAVATIONS IN AREAS OF POTENTIALLY CONTAMINATED SOILS OR GROUNDWATER SHALL BE PASSED THROUGH A TREATMENT SYSTEM THEN DISCHARGED INTO A INFILTRATION BASIN CONSTRUCTED WITHIN THE PROJECT AREA TO PERCOLATE BACK INTO LOCAL GROUNDWATER. THE BASIN(S) WILL BE CONSTRUCTED WITHIN CLOSE PROXIMITY TO THE EXCAVATIONS AND BE DESIGNED TO PREVENT SPREAD OF CONTAMINATION INTO PREVIOUSLY UNCONTAMINATED MEDIA. THE CONTRACTOR WILL OBTAIN APPROVAL FOR PERCOLATION OF CONTAMINATED GROUNDWATER FROM THE NJDEP VIA AN NJDEP ON-SCENE COORDINATOR DISCHARGE AUTHORITY LETTER. THIS APPROVAL WILL BE ISSUED BASED UPON NJDEP REVIEW AND ACCEPTANCE OF THE CONTRACTOR'S PLAN, AS AN ALTERNATE, EFFLUENT MAY BE DISCHARGED TO THE NORTH HUDSON SEWERAGE AUTHORITY WITH APPROPRIATE PERMITS AND APPROVAL.
4. THE CONTRACTOR SHALL MAINTAIN A DAILY LOG DOCUMENTING CONTAMINATED GROUNDWATER AND SURFACE WATER COLLECTION AND HANDLING ACTIVITIES, AND SHALL MAKE THE LOG AVAILABLE TO THE ENGINEER UPON REQUEST. THE LOG SHALL NOTE DAILY WATER REMOVAL, TREATMENT AND DISCHARGE VOLUMES, EFFLUENT SAMPLING ACTIVITIES AND RESULTS (IF REQUIRED), DISCHARGE OR SPILL INCIDENTS, REPORTING ACTIVITIES AND PERTINENT FIELD OBSERVATIONS SUCH AS SHEEN, ODOR, TURBIDITY, AND RUN-ON AND RUN-OFF.
5. AN INSPECTION OF THE EXCAVATION SHALL BE MADE BY THE CITY ENGINEER PRIOR TO THE INSTALLATION OF THE DETENTION BASIN.

STRUCTURAL FILL AND BACKFILL

[COORDINATE ALL EARTHWORK WITH GEOTECHNICAL ENGINEERING REPORT]

IMPORT/ON-SITE STRUCTURAL FILL MATERIAL:
SOILS PLACED AS STRUCTURAL FILL MATERIAL SHOULD CONSIST OF WELL GRADED SAND OR GRAVEL WITH A MAXIMUM PARTICLE SIZE OF THREE INCHES IN DIAMETER AND LESS THAN 15 PERCENT OF MATERIAL PASSING THE NUMBER 200 SIEVE. THESE MATERIALS SHOULD BE FREE OF OBJECTIONABLE DEBRIS (CLAY CLUMPS, ORGANIC AND/OR DELETERIOUS MATERIAL, ETC.) AND WITHIN MOISTURE CONTENTS SUITABLE FOR COMPACTION. ALTERNATIVE SOIL TYPES WITH HIGHER PERCENTAGES OF SILT AND CLAY MAY BE CONSIDERED, PROVIDED THAT THE CONTRACTOR IS ABLE TO ACHIEVE PROPER COMPACTION AND MAINTAIN SUITABLE SUBGRADE ONCE THE MATERIAL IS PLACED. FINE-GRAINED SOILS AND/OR GRANULAR SOILS WITH HIGHER PERCENTAGES OF SILT AND CLAY ARE EXTREMELY MOISTURE SENSITIVE AND WILL ONLY BE SUITABLE FOR REUSE AS STRUCTURAL FILL MATERIAL DURING IDEAL WEATHER CONDITIONS. MATERIALS WETTED BEYOND THE OPTIMUM MOISTURE CONTENT; CONTAIN OVERSIZED ROCK OR DEBRIS; AND/OR CONTAIN INCREASED AMOUNTS OF OBJECTIONABLE DEBRIS WILL NOT BE SUITABLE FOR REUSE AS STRUCTURAL FILL MATERIAL WITHOUT SPECIAL HANDLING. AS SUCH, THE CONTRACTOR SHOULD BE RESPONSIBLE FOR IMPORTING STRUCTURAL FILL MATERIAL AND/OR PROCESSING ON-SITE SOILS AS REQUIRED SO THAT THESE MATERIALS ARE SUITABLE FOR STRUCTURAL FILL PLACEMENT.

IF ENCOUNTERED COBBLES/BOULDERS, EXCAVATED ROCK AND/OR OVERSIZED DEBRIS GREATER THAN THREE INCHES IN DIAMETER WILL NEED TO BE SEPARATED FROM ON-SITE SOILS TO BE PLACED AS STRUCTURAL FILL. APPROVED MATERIAL BETWEEN THREE TO 12 INCHES IN DIAMETER MAY BE CRUSHED OR INDIVIDUALLY PLACED IN FILL LAYERS DEEPER THAN TWO FEET BELOW PROPOSED SUBGRADE LEVELS. CARE MUST BE TAKEN TO INDIVIDUALLY SEAT ANY LARGE PARTICLES AND TO COMPACT SOIL AROUND LARGE PARTICLES WITH HAND OPERATED EQUIPMENT TO MINIMIZE THE RISK OF VOID FORMATION. THE LARGER MATERIAL SHOULD NOT BE PLACED NEAR AREAS OF THE PROPOSED UTILITY OR PLANNED EXCAVATION. BOULDERS LARGER THAN APPROXIMATELY 12 INCHES ARE NOT EXPECTED TO BE ADEQUATE FOR USE AS FILL OR BACKFILL AND SHOULD BE REMOVED FROM THE SITE OR CRUSHED TO AN ADEQUATE SIZE.

COMPACTION AND PLACEMENT REQUIREMENTS:
STRUCTURAL FILL AND BACKFILL SHOULD BE PLACED IN MAXIMUM 12 INCH LOOSE LIFTS AND COMPACTED TO 95 PERCENT OF THE MAXIMUM DRY DENSITY WITHIN A TARGETED TWO PERCENT OF THE OPTIMUM MOISTURE CONTENT AS DETERMINED BY ASTM D 1557 (MODIFIED PROCTOR). FILL MATERIAL COMPACTED WITH RELATIVELY LIGHT HAND HELD EQUIPMENT MAY NEED TO BE PLACED IN THINNER LIFTS.

STRUCTURAL FILL TESTING:
BEFORE FILLING OPERATIONS BEGIN, REPRESENTATIVE SAMPLES OF EACH PROPOSED FILL MATERIAL (ON-SITE AND IMPORTED) SHOULD BE COLLECTED. THE SAMPLES SHOULD BE TESTED TO DETERMINE THE MAXIMUM DRY DENSITY, OPTIMUM MOISTURE CONTENT, NATURAL MOISTURE CONTENT, GRADATION, AND PLASTICITY OF THE SOIL. THESE TESTS ARE NEEDED FOR QUALITY CONTROL DURING COMPACTION AND ALSO TO DETERMINE IF THE FILL MATERIAL IS ACCEPTABLE. THE PLACEMENT OF ALL FILL AND BACKFILL SHOULD BE MONITORED BY A GEOTECHNICAL ENGINEER OR TECHNICIAN TO ENSURE THAT THE SPECIFIED MATERIAL AND LIFT THICKNESSES ARE PROPERLY INSTALLED. A SUFFICIENT NUMBER OF IN-PLACE DENSITY TESTS SHOULD BE PERFORMED DURING FILL PLACEMENT TO ENSURE THAT THE SPECIFIED COMPACTION IS ACHIEVED THROUGHOUT THE HEIGHT OF THE FILL OR BACKFILL.

NATIONAL PARK SERVICE TOPSOIL AND IMPORTED FILL REQUIREMENTS:
INTACT NATIVE TOPSOIL FROM THE PROJECT AREA SHALL BE RETAINED WHENEVER FEASIBLE. SHOULD ADDITIONAL FILL BE NEEDED, ALL FILL MUST BE OF QUALITY SUITABLE FOR USE IN A NATIONAL PARK UNIT. AT SHAO, THIS IS TYPICALLY NJ RESIDENTIAL DIRECT CONTACT STANDARDS, UNLESS OTHERWISE APPROVED IN ADVANCE BY NPS. THOSE STANDARDS DO NOT INCLUDE RADIONUCLIDES. ANY SUBSTRUCTURE FILL SHOULD BE TESTED/INSPECTED TO ENSURE RADIONUCLIDES ARE NOT PRESENT IN A CONCENTRATION THAT DECAY WILL RESULT IN RELEASE OF RADON GAS IN A CONCENTRATION THAT WOULD BE A HEALTH CONCERN. ANY FILL MATERIALS REQUIRED FOR THE PROJECT MUST BE OBTAINED FROM A PARK-APPROVED SOURCE.

200' PROPERTY OWNER'S LIST

BLOCK	LOT	OWNER	OWNER ADDRESS	ADDRESS OF PROPERTY WITHIN 200 FEET
135.0	1	Christina J. Spadavecchia	104 Whispering Hills Dr. South Plainfield, NJ 07080	76 Washington Avenue, North Plainfield, NJ 07060
135.0	2	Marcia Wiggan	78 Washington Avenue, North Plainfield, NJ 07060	78 Washington Avenue, North Plainfield, NJ 07060
135.0	3	Luis Garces	80 Washington Avenue, North Plainfield, NJ 07060	80 Washington Avenue, North Plainfield, NJ 07060
135.0	4	Steven & Elana Tobengauz	4 Wagon Way, Holmdel, NJ 07733	11 Rockview Avenue, North Plainfield, NJ 07060
135.0	11	Thomas & Nancy Young	138 Rockaway Road, Lebanon, NJ 08833	82 Linden Avenue, North Plainfield, NJ 07060
136.0	1	Arutro & Andrea Torres	2323 Park Avenue South Plainfield, NJ 07080	144-148 Sycamore Avenue, North Plainfield, NJ 07060
136.0	2	Jose, Veronica & Nezo Velazquez	154 Sycamore Avenue, North Plainfield, NJ 07060	154 Sycamore Avenue, North Plainfield, NJ 07060
136.0	3	Milton & Garces Villabreses	154-156 Sycamore Avenue, North Plainfield, NJ 07060	154-156 Sycamore Avenue, North Plainfield, NJ 07060
136.0	4	Jorge Salguero	103 Linden Avenue, North Plainfield, NJ 07060	103 Linden Avenue, North Plainfield, NJ 07060
136.0	5	Stanley Goodwin	P.O. Box 2 Raritan, NJ 08869	99 Linden Avenue, North Plainfield, NJ 07060
136.0	6	Kateryn & Alfredo Pequero	2438 Morris Avenue, Apt 5A, Bronx, NY 10468	73 Washington Avenue, North Plainfield, NJ 07060
136.0	7	Khaled, Ismail & Christina Kwok	69 Washington Avenue, North Plainfield, NJ 07060	69 Washington Avenue, North Plainfield, NJ 07060
136.0	8	Marcia Santana	65 Washington Avenue, North Plainfield, NJ 07060	65 Washington Avenue, North Plainfield, NJ 07060
136.0	9	Andy Pierre & Edele St Jean	106 Park Place, North Plainfield, NJ 07060	106 Park Place, North Plainfield, NJ 07060
136.0	10	Francisco Aguilar	110-112 Park Place, North Plainfield, NJ 07060	110-112 Park Place, North Plainfield, NJ 07060
131.0	26	Elizabeth Beebe	12 Rockview Avenue, North Plainfield, NJ 07060	12 Rockview Avenue, North Plainfield, NJ 07060
131.0	27	Steven & Judtih Romeo	16 Rockview Avenue, North Plainfield, NJ 07060	16 Rockview Avenue, North Plainfield, NJ 07060
131.0	28	Stephen & Marie Colangelo	249 Railroad Avenue, Stirling, NJ 07980	18-20 Rockview Avenue, North Plainfield, NJ 07060
131.0	29	Yeshive Tiferes Boruch, Inc.	112 Linden Avenue, North Plainfield, NJ 07060	22-24 Rockview Avenue, North Plainfield, NJ 07060
131.0	30	Yeshive Tiferes Boruch, Inc.	21 Rockview Avenue, North Plainfield, NJ 07060	26-28 Rockview Avenue, North Plainfield, NJ 07060
131.0	31.01	Yeshive Tiferes Boruch, Inc.	21 Rockview Avenue, North Plainfield, NJ 07060	30 Rockview Avenue, North Plainfield, NJ 07060
131.0	31.02	Yeshive Tiferes Boruch, Inc.	21 Rockview Avenue, North Plainfield, NJ 07060	32 Rockview Avenue, North Plainfield, NJ 07060
131.0	32	Anthony Baker	34 Rockview Avenue, North Plainfield, NJ 07060	34 Rockview Avenue, North Plainfield, NJ 07060
132.0	1	Reid Kirchberger	171 Sycamore Avenue, North Plainfield, NJ 07060	171 Sycamore Avenue, North Plainfield, NJ 07060
132.0	2	Eva Marie Mondovano	167 Sycamore Avenue, North Plainfield, NJ 07060	167 Sycamore Avenue, North Plainfield, NJ 07060
132.0	3	Allen & Sora Uhr	163 Sycamore Avenue, North Plainfield, NJ 07060	163 Sycamore Avenue, North Plainfield, NJ 07060
132.0	4	Tsvi Chaim & Tzivia Blumenfeld	159 Sycamore Avenue, North Plainfield, NJ 07060	159 Sycamore Avenue, North Plainfield, NJ 07060
132.0	5	John Price	153 Sycamore Avenue, North Plainfield, NJ 07060	153 Sycamore Avenue, North Plainfield, NJ 07060
132.0	6	149 Sycamore Ave Realty, LLC	20 Roberts Road, Warren, NJ 07059	145-151 Sycamore Avenue, North Plainfield, NJ 07060
132.0	20	Devon Sobers	35 Rockview Avenue, North Plainfield, NJ 07060	35 Rockview Avenue, North Plainfield, NJ 07060
132.0	21.01	Rockview Property Investment, LLC	77 Briarwood Drive, West Warren, NJ 07059	29-33 Rockview Avenue, North Plainfield, NJ 07060
132.0	21.02	Theodore & Theo Slack	10 Northridge Way, Warren, NJ 07059	175 Sycamore Avenue, North Plainfield, NJ 07060
137.0	3	74 Washington, LLC	70-74 Washington Avenue, North Plainfield, NJ 07060	70-74 Washington Avenue, North Plainfield, NJ 07060

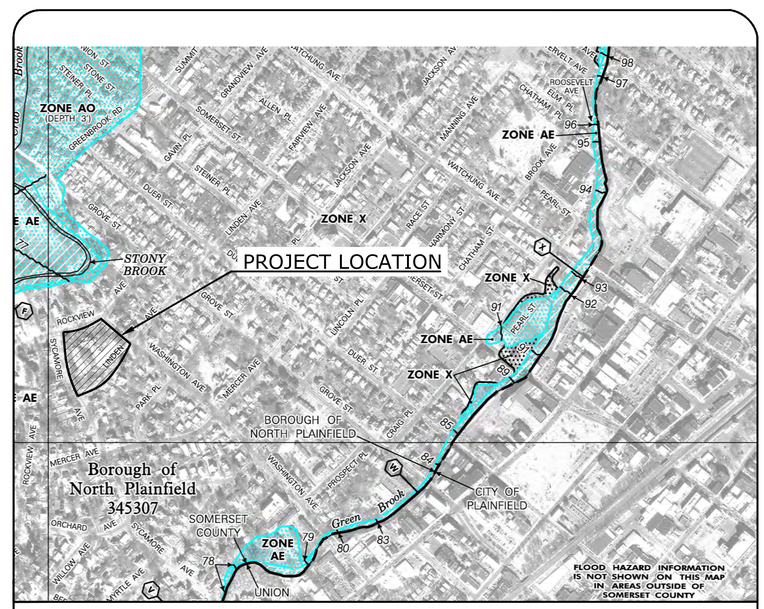

FEMA MAP
SCALE: NTS

SCHEDULE OF REVISIONS

1.	03/08/2023	REVISED PER HPC MEETING	ENS	CJS

OWNER/APPLICANT
YESHIVA TIFERES BORUCH, INC.
112 LINDEN AVENUE
NORTH PLAINFIELD, NJ 07060

E 2 PROJECT MANAGEMENT LLC

87 HIBERNIA AVENUE
ROCKAWAY, N.J. 07866
PHONE: (973) 299-5200
FAX: (973) 299-5059
www.E2PM.com

THIS DRAWING DOES NOT INCLUDE NECESSARY COMPONENTS FOR CONSTRUCTION SAFETY. ALL CONSTRUCTION MUST BE DONE IN COMPLIANCE WITH THE OCCUPATIONAL SAFETY AND HEALTH ACT OF 1970 AND ALL RULES AND REGULATIONS THERETO APPURTENANT. THIS DRAWING AND THE DESIGN FEATURES OR CONSTRUCTION DISCLOSED ARE PROPRIETARY TO E2 PROJECT MANAGEMENT LLC AND SHALL NOT BE REPRODUCED, ALTERED OR COPIED WITHOUT WRITTEN PERMISSION, SHALL NOT BE USED IN ANY MANNER DETRIMENTAL TO ITS INTEREST AND SHALL BE RETURNED UPON REQUEST.

N.J. ENGINEERING CERTIFICATE OF AUTHORIZATION No. 24GA28118200

I CERTIFY THAT THESE PLANS HAVE BEEN PREPARED UNDER MY SUPERVISION

CHARLES J. STEWART, P.E., P.L.S. N.J. NO. 24GB03588400
REGISTERED PROFESSIONAL ENGINEER AND LAND SURVEYOR

PROJECT NAME

YESHIVA NEW ACADEMY BUILDING

TAX LOT 1
BLOCK 134

21 ROCKVIEW AVENUE
BOROUGH OF NORTH PLAINFIELD
SOMERSET COUNTY, NJ

DRAWING TITLE

GENERAL NOTES AND 200' PROPERTY OWNER'S LIST

CHECKED BY: CS	DRAWN BY: ENS
SCALE: AS NOTED	SHEET NO: 2 OF 15
PROJECT #: P-22-47-01	FIRST ISSUE: 8/24/2022

DRAWING NO.

SP-101.00

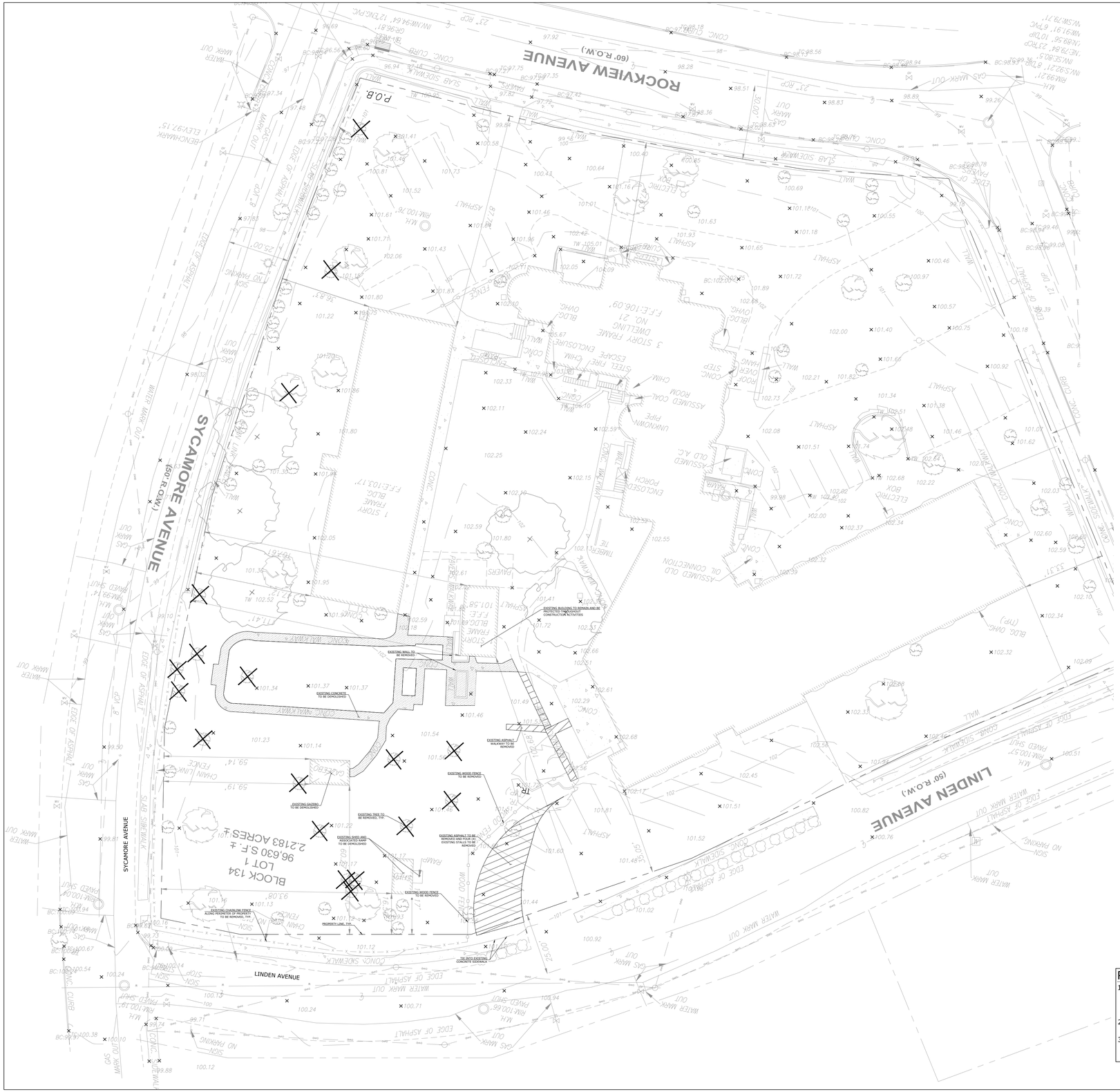

DEMOLITION NOTES

1. DURING SITE DEMOLITION AND REPAIRS, THE FOLLOWING FEATURES SHALL REMAIN UNLESS SPECIFIED:
   - EXISTING CURBS
   - EXISTING SIDEWALKS
   - EXISTING TREES (SIDEWALK)
   - EXISTING LIGHT POLES WITHIN R.O.W.
   - EXISTING UTILITY POLES WITHIN R.O.W.
   - EXISTING UNDERGROUND UTILITIES
   - EXISTING STREET SIGNS
2. SURVEY EXISTING BUILDINGS FOR HAZARDOUS WASTE. REMOVE ALL HAZARDOUS WASTE AND SOLID WASTE PRIOR TO DEMOLITION PER STATE AND FEDERAL RULES AND REGULATIONS.
3. INSTALL ANTI-VERMIN MEASURES 30 DAYS PRIOR TO DEMOLITION.
4. ALL EXISTING ADA RAMPS AT EACH STREET CORNER SHALL NOT BE DEMOLISHED.
5. ALL EXISTING U/G UTILITIES ENTERING THE SITE SHALL BE RE-LOCATED OR REMOVED IN ACCORDANCE WITH APPLICABLE REGULATIONS PRIOR TO ANY DEMOLITION IF THEY CONFLICT WITH ANY OF THE PROPOSED IMPROVEMENTS.
6. ALL EXISTING MANHOLES, VALVE BOXES, UTILITY ACCESS, CATCH BASINS ETC. SHALL BE PROTECTED AND NOT DAMAGED. RESET THE TOP OF RIMS AS NOTED ON PLANS.
7. CATCH BASINS AND MANHOLES SHOWN SHALL BE CLEANED OUT AS DIRECTED.
8. EXISTING FIRE HYDRANTS SHALL BE PROTECTED AND MAINTAINED ACTIVE THROUGHOUT THE DEMOLITION AND CONSTRUCTION OF THE PROJECT.
9. CONTRACTOR SHALL BE RESPONSIBLE FOR REMOVING ALL U/G OBSTRUCTIONS AND DISPOSING OF ALL EXCAVATED SOILS AND SPOILS.
10. ALL DAMAGED PUBLIC PROPERTY, INCLUDING BUT NOT LIMITED TO, CURBING, LIGHT POLES, LANDSCAPING, ETC. TO BE PROTECTED DURING DEMOLITION AND CONSTRUCTION.
11. ANY DAMAGE TO THE PUBLIC RIGHT OF WAY MUST BE REPAIRED/INSTALLED TO EQUAL STANDARDS.
12. PEDESTRIAN ACCESS ALONG PUBLIC STREETS TO BE MAINTAINED AT ALL TIMES.
13. APPLICANT AND PLANNING DIVISION SHALL COORDINATE WITH PSEG FOR THE REMOVAL OF FLOODLIGHTS MOUNTED ON TWO (2) UTILITY POLES ON WEST THIRD STREET.
14. EXISTING LATERALS SHALL BE CAPPED AND ABANDONED IN PLACE PER PMUA REGULATIONS. LATERAL CAPPING MUST BE OBSESSED BY PMUA STAFF.

EXISTING TREE PROTECTION & REMOVAL NOTES

1. EXISTING TREES THAT ARE TO REMAIN SHALL BE PROTECTED WITH TREE FENCING INSTALLED PER DETAIL.
2. EXISTING TREES SHALL BE TRIMMED BACK AS NEEDED.

CONSTRUCTION SAFETY

1. CONTRACTOR SHALL IMPLEMENT A SIDEWALK PROTECTION PLAN TO SAFEGUARD THE PEDESTRIANS.
2. ANY SIDEWALK CLOSURES DURING CONSTRUCTION SHALL BE COORDINATED WITH THE CITY, COUNTY AND STATE AS REQUIRED.

- 12 TREES TO BE REMOVED 4"-8" DBH
- 4 TREES TO BE REMOVED 12"-18" DBH
- 1 TREE TO BE REMOVED 18"-24" DBH
- 1 TREE TO BE REMOVED 24"36" DBH

18 TOTAL TREES TO BE REMOVED WHICH WILL REQUIRED 33 NEW TREES PER SHADE TREE ORDINANCE

0 10' 20' 40'
SCALE: 1"=20'

REFERENCE NOTES:

1. BOUNDARY AND TOPOGRAPHIC INFORMATION AND EXISTING UTILITIES SHOWN HEREON TAKEN FROM MAP PREPARED BY NEWLINES ENGINEERING & SURVEY ENTITLED "BOUNDARY & TOPOGRAPHIC SURVEY BLOCK 134 - LOT 1, 21 ROCKVIEW AVENUE, NORTH PLAINFIELD BOROUGH, SOMERSET COUNTY, NEW JERSEY" DATED DECEMBER 6, 2021.
2. THE PROPOSED BUILDING LAYOUT BASED ON ARCHITECTURAL PLANS PROVIDED ELECTRONICALLY FROM B+F DESIGN STUDIO & ARCHITECTURAL SERVICES ON AUGUST 17, 2022.
3. EXISTING PARKING STRIPING OBTAINED FROM PLAN ENTITLED "SURVEY & SITE PLAN FOR BLOCK 134, LOT 21, 21 ROCKVIEW AVENUE NORTH PLAINFIELD SOMERSET COUNTY, NJ" PREPARED BY HOWARD J. SHERSHINGER, PLS.

SCHEDULE OF REVISIONS

1.	03/08/2023	REVISED PER HPC MEETING	ENS	CJS

OWNER/APPLICANT
YESHIVA TIFERES BORUCH, INC.
112 LINDEN AVENUE
NORTH PLAINFIELD, NJ 07060

E 2 PROJECT MANAGEMENT LLC

87 HIBERNIA AVENUE
ROCKAWAY, N.J. 07866
PHONE : (973) 299-5200
FAX: (973) 299-5059
www.E2PM.com

THIS DRAWING DOES NOT INCLUDE NECESSARY COMPONENTS FOR CONSTRUCTION SAFETY. ALL DRAWINGS, SPECIFICATIONS, AND OTHER INSTRUMENTS OF SERVICE, AS DEFINED BY THE COPYRIGHT ACT OF 1970 AND ALL RULES AND REGULATIONS THERETO APPURTENANT, THIS DRAWING AND THE DESIGN FEATURES OR CONSTRUCTION DISCLOSED ARE PROPRIETARY TO E2 PROJECT MANAGEMENT LLC AND SHALL NOT BE REPRODUCED, ALTERED OR COPIED WITHOUT WRITTEN PERMISSION, SHALL NOT BE USED IN ANY MANNER DETRIMENTAL TO ITS INTEREST AND SHALL BE RETURNED UPON REQUEST.

N.J. ENGINEERING CERTIFICATE OF AUTHORIZATION No. 24GA28118200

I CERTIFY THAT THESE PLANS HAVE BEEN PREPARED UNDER MY SUPERVISION

CHARLES J. STEWART, P.E., P.L.S. N.J. NO. 24GB03588400
REGISTERED PROFESSIONAL ENGINEER AND LAND SURVEYOR

PROJECT NAME

YESHIVA NEW ACADEMY BUILDING

TAX LOT 1
BLOCK 134

21 ROCKVIEW AVENUE
BOROUGH OF NORTH PLAINFIELD
SOMERSET COUNTY, NJ

DRAWING TITLE

EXISTING CONDITION AND DEMOLITION PLAN

CHECKED BY: CS	DRAWN BY: ENS
SCALE: 1" = 20'	SHEET NO: 3 OF 15
PROJECT #: P-22-47-01	FIRST ISSUE: 8/24/2022

DRAWING NO.

SP-102.00

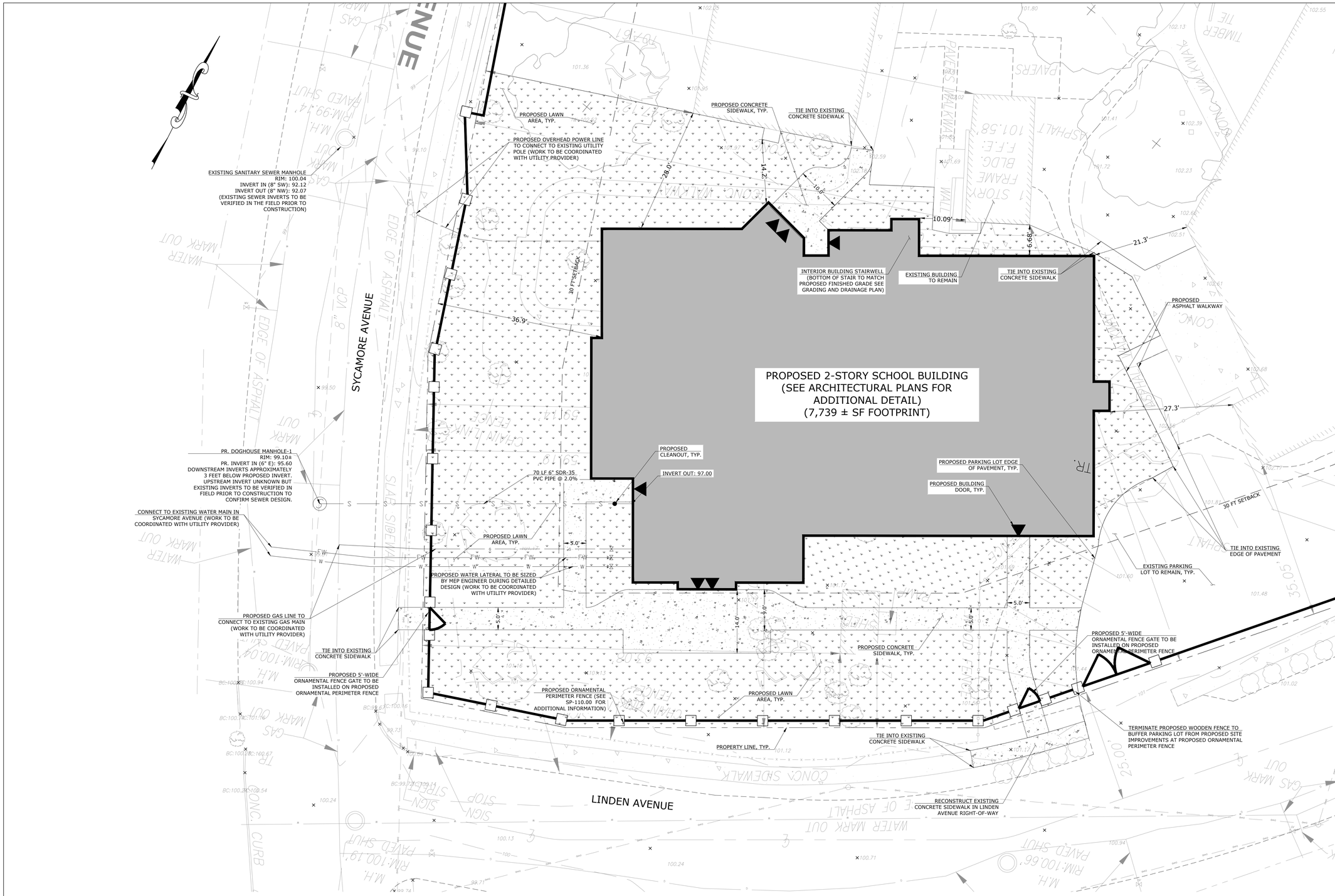

REFERENCE NOTES:

1. BOUNDARY AND TOPOGRAPHIC INFORMATION AND EXISTING UTILITIES SHOWN HEREON TAKEN FROM MAP PREPARED BY NEWLINES ENGINEERING & SURVEY ENTITLED "BOUNDARY & TOPOGRAPHIC SURVEY BLOCK 134 - LOT 1, 21 ROCKVIEW AVENUE, NORTH PLAINFIELD BOROUGH, SOMERSET COUNTY, NEW JERSEY" DATED DECEMBER 6, 2021.
2. THE PROPOSED BUILDING LAYOUT BASED ON ARCHITECTURAL PLANS PROVIDED ELECTRONICALLY FROM B+F DESIGN STUDIO & ARCHITECTURAL SERVICES ON AUGUST 17, 2022.

UTILITY NOTES:

1. SANITARY SEWER INFORMATION IN SYCAMORE AVENUE WAS OBTAINED FROM PLAN PROVIDED BY BOROUGH OF NORTH PLAINFIELD DEPARTMENT OF PUBLIC WORKS TITLED "EXISTING CONDITIONS SURVEY - ROCKVIEW AVENUE, BOROUGH OF NORTH PLAINFIELD, SOMERSET COUNTY, NEW JERSEY" DATED 2022-03.
2. THE ABOVE REFERENCED PLAN IS IN A DIFFERENT VERTICAL DATUM THAN THE SURVEY SHOWN ON THIS PLAN. INVERT INFORMATION WAS CALCULATED USING THE DEPTH OF INVERT BELOW THE SURVEYED RIM ELEVATIONS.

SCHEDULE OF REVISIONS

1.	03/08/2023	REVISED PER HPC MEETING	ENS	CJS

OWNER/APPLICANT
YESHIVA TIFERES BORUCH, INC.
112 LINDEN AVENUE
NORTH PLAINFIELD, NJ 07060

E 2 PROJECT MANAGEMENT LLC

87 HIBERNIA AVENUE
ROCKAWAY, N.J. 07866
PHONE : (973) 299-5200
FAX: (973) 299-5059
www.E2PM.com

THIS DRAWING DOES NOT INCLUDE NECESSARY COMPONENTS FOR CONSTRUCTION SAFETY. ALL CONSTRUCTION WORK SHALL BE PERFORMED IN ACCORDANCE WITH OSHA STANDARDS AND THE ACT OF 1970 AND ALL RULES AND REGULATIONS THERETO APPURTENANT. THIS DRAWING AND THE DESIGN FEATURES OR CONSTRUCTION DISCLOSED ARE PROPRIETARY TO E2 PROJECT MANAGEMENT LLC AND SHALL NOT BE REPRODUCED, ALTERED OR COPIED WITHOUT WRITTEN PERMISSION, SHALL NOT BE USED IN ANY MANNER DETRIMENTAL TO ITS INTEREST AND SHALL BE RETURNED UPON REQUEST.

N.J. ENGINEERING CERTIFICATE OF AUTHORIZATION No. 24GA28118200

I CERTIFY THAT THESE PLANS HAVE BEEN PREPARED UNDER MY SUPERVISION

CHARLES J. STEWART, P.E., P.L.S. N.J. NO. 24GB03588400
REGISTERED PROFESSIONAL ENGINEER AND LAND SURVEYOR

PROJECT NAME

YESHIVA NEW ACADEMY BUILDING

TAX LOT 1
BLOCK 134

21 ROCKVIEW AVENUE
BOROUGH OF NORTH PLAINFIELD
SOMERSET COUNTY, NJ

DRAWING TITLE

SITE AND UTILITY PLAN

CHECKED BY: CS	DRAWN BY: ENS
SCALE: 1" = 10'	SHEET NO: 4 OF 15
PROJECT #: P-22-47-01	FIRST ISSUE: 8/24/2022

DRAWING NO.

SP-103.00

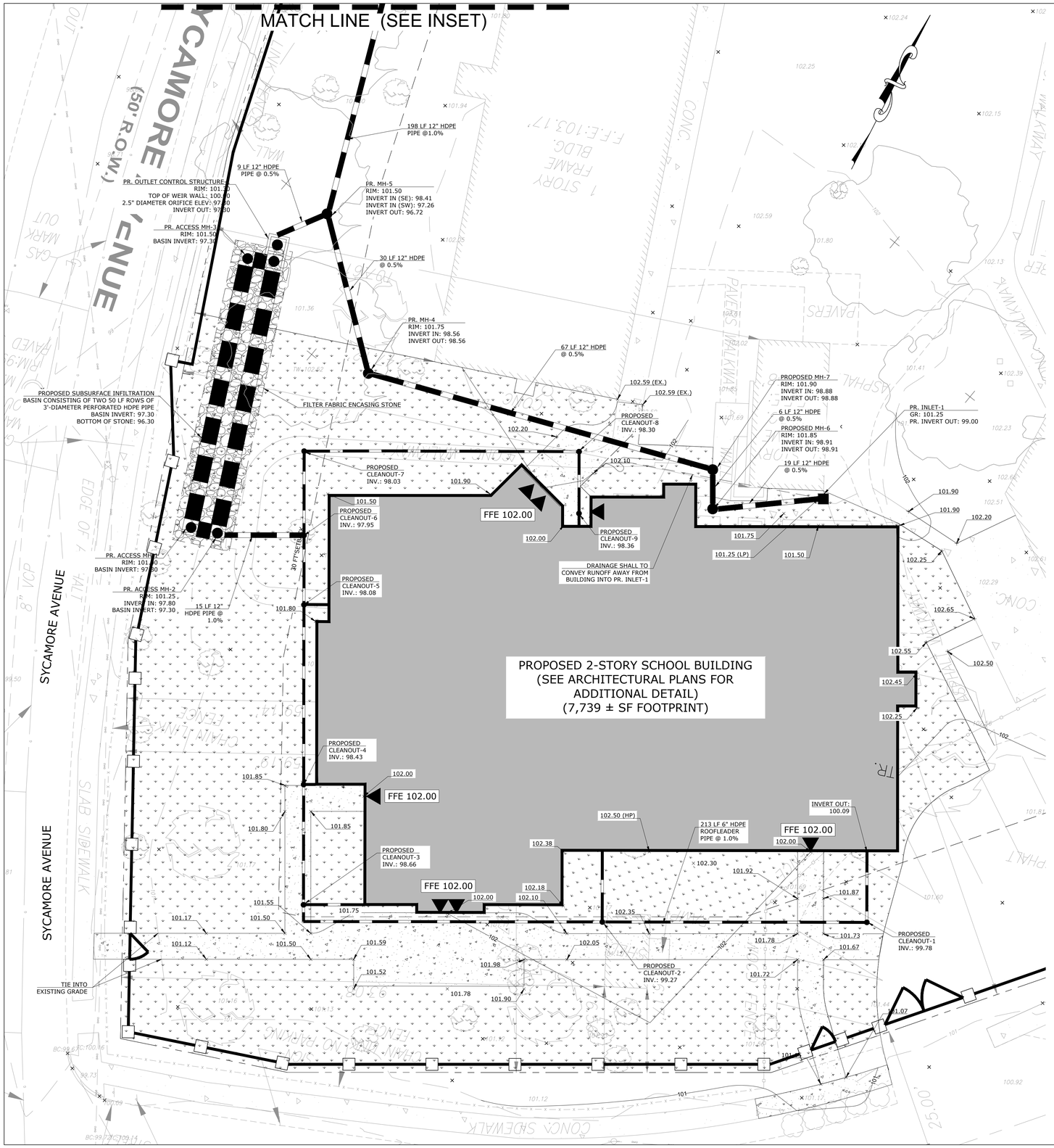

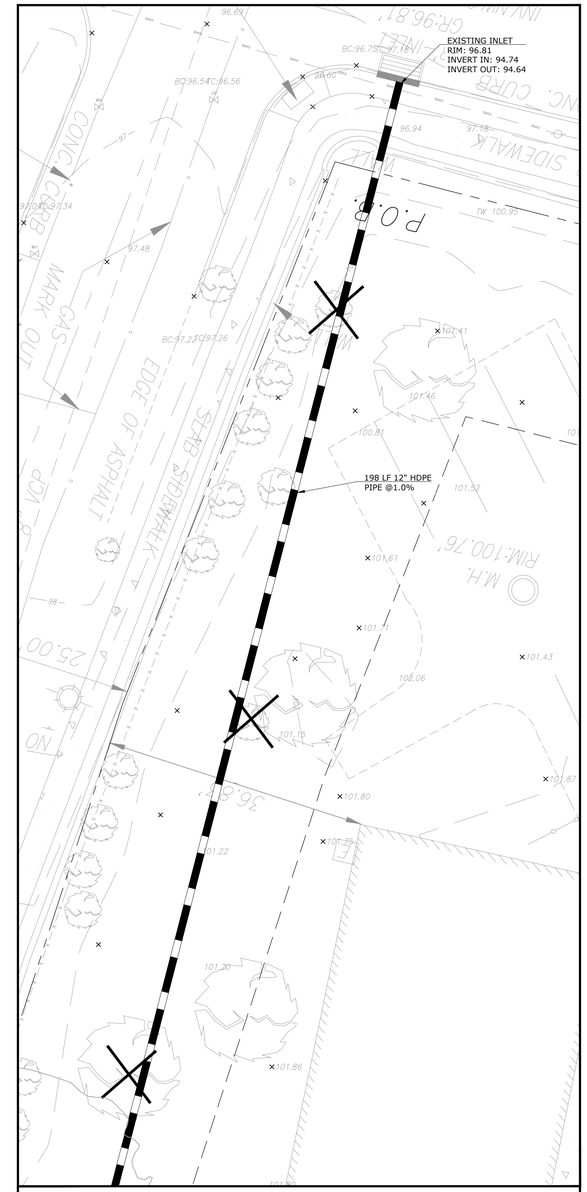

DRAINAGE INSET

REFERENCE NOTES:

1. BOUNDARY AND TOPOGRAPHIC INFORMATION AND EXISTING UTILITIES SHOWN HEREON TAKEN FROM MAP PREPARED BY NEWLINES ENGINEERING & SURVEY ENTITLED "BOUNDARY & TOPOGRAPHIC SURVEY BLOCK 134 - LOT 1, 21 ROCKVIEW AVENUE, NORTH PLAINFIELD BOROUGH, SOMERSET COUNTY, NEW JERSEY" DATED DECEMBER 6, 2021.
2. THE PROPOSED BUILDING LAYOUT BASED ON ARCHITECTURAL PLANS PROVIDED ELECTRONICALLY FROM B+F DESIGN STUDIO & ARCHITECTURAL SERVICES ON AUGUST 17, 2022.

0 5' 10' 20'
SCALE: 1"=10'

SCHEDULE OF REVISIONS

1.	03/08/2023	REVISED PER HPC MEETING	ENS	CJS

OWNER/APPLICANT
YESHIVA TIFERES BORUCH, INC.
112 LINDEN AVENUE
NORTH PLAINFIELD, NJ 07060

E 2 PROJECT MANAGEMENT LLC

87 HIBERNIA AVENUE
ROCKAWAY, N.J. 07866
PHONE: (973) 299-5200
FAX: (973) 299-5059
www.E2PM.com

THIS DRAWING DOES NOT INCLUDE NECESSARY COMPONENTS FOR CONSTRUCTION SAFETY. ALL CONSTRUCTION MUST BE DONE IS COMPLIANCE WITH THE OCCUPATIONAL SAFETY AND HEALTH ACT OF 1970 AND ALL RULES AND REGULATIONS THERETO APPURTENANT. THIS DRAWING AND THE DESIGN FEATURES OR CONSTRUCTION DISCLOSED ARE PROPRIETARY TO E2 PROJECT MANAGEMENT, LLC AND SHALL NOT BE REPRODUCED, ALTERED OR COPIED WITHOUT WRITTEN PERMISSION, SHALL NOT BE USED IN ANY MANNER DETRIMENTAL TO ITS INTEREST AND SHALL BE RETURNED UPON REQUEST.

N.J. ENGINEERING CERTIFICATE OF AUTHORIZATION No. 24GA28118200

I CERTIFY THAT THESE PLANS HAVE BEEN PREPARED UNDER MY SUPERVISION

CHARLES J. STEWART, P.E., P.L.S. N.J. NO. 24GB03588400
REGISTERED PROFESSIONAL ENGINEER AND LAND SURVEYOR

PROJECT NAME

YESHIVA NEW ACADEMY BUILDING

TAX LOT 1
BLOCK 134

21 ROCKVIEW AVENUE
BOROUGH OF NORTH PLAINFIELD
SOMERSET COUNTY, NJ

DRAWING TITLE

GRADING AND DRAINAGE PLAN

CHECKED BY: CS	DRAWN BY: ENS
SCALE: 1" = 10'	SHEET NO: 5 OF 15
PROJECT #: P-22-47-01	FIRST ISSUE: 8/24/2022

DRAWING NO.

SP-104.00

0 10' 20' 40'

SCALE: 1"=20'

PLANTING LIST

Key	Quantity	Common Name	Scientific Name	Native	Size/Root	Spacing/Notes
Ar	16	October Glory Red Maple	Acer rubrum 'October Glory'	Y	2.5-3" Cal. Min. / B&B	Spaced as Shown
Bn	7	Dura-Heat River Birch	Betula nigra 'BNMTF'	Y	2-2.5" Cal. / B&B	Spaced as Shown
Oa	5	Sourwood / Sorrel Tree	Oxydendrum arboreum	Y	2-2.5" Cal. / B&B	Spaced as Shown
Tc	5	Greenspire Littleleaf Linden	Tilia cordata 'Greenspire'	N	2.5-3" Cal. Min. / B&B	Spaced as Shown
Axg	56	Little Richard Abelia	Abelia x grandiflora 'Little Richard'	Y	#3 Cont.	Spaced as Shown
Eg	13	Emerald Green Arborvitae	Thuja occidentalis 'Smaragd'	Y	3.5-4.0' / B&B	Spaced as Shown

NOTE:

EXCEPT FOR GREENSPIRE LINDEN, SPECIES LISTED ABOVE ARE NATIVE (AS RECOMMENDED BY THE BOROUGH) AND SELECTED FOR SIZE, SUITABILITY, LOW MAINTENANCE, AND COLOR SCHEME. WITH POSSIBLE EXCEPTION OF THE SOURWOOD/SORREL TREE, SPECIES LISTED ABOVE ARE READILY-AVAILABLE FROM VARIOUS AREA-WIDE NURSERIES. POTENTIAL SUITABLE SUBSTITUTES FOR THIS SPECIES ONLY INCLUDE AMERICAN HOPHORNBEAM (OSTRYA VIRGINIANA); EASTERN REDBUD (CERCIS CANADENSIS); AND EASTERN DOGWOOD (CORNUS FLORIDA); HOWEVER, NO SUBSTITUTES UNLESS APPROVED BY LANDSCAPE DESIGNER.

REFERENCE NOTES:

1. BOUNDARY AND TOPOGRAPHIC INFORMATION AND EXISTING UTILITIES SHOWN HEREON TAKEN FROM MAP PREPARED BY NEWLINES ENGINEERING & SURVEY ENTITLED "BOUNDARY & TOPOGRAPHIC SURVEY BLOCK 134 - LOT 1, 21 ROCKVIEW AVENUE, NORTH PLAINFIELD BOROUGH, SOMERSET COUNTY, NEW JERSEY" DATED DECEMBER 6, 2021.
2. THE PROPOSED BUILDING LAYOUT BASED ON ARCHITECTURAL PLANS PROVIDED ELECTRONICALLY FROM B+F DESIGN STUDIO & ARCHITECTURAL SERVICES ON AUGUST 17, 2022.

SCHEDULE OF REVISIONS

1.	03/08/2023	REVISED PER HPC MEETING	ENS	CJS

OWNER/APPLICANT

YESHIVA TIFERES BORUCH, INC.
112 LINDEN AVENUE
NORTH PLAINFIELD, NJ 07060

E 2 PROJECT MANAGEMENT LLC

87 HIBERNIA AVENUE
ROCKAWAY, N.J. 07866
PHONE: (973) 299-5200
FAX: (973) 299-5059
www.E2PM.com

THIS DRAWING DOES NOT INCLUDE NECESSARY COMPONENTS FOR CONSTRUCTION SAFETY. ALL DRAWINGS, SPECIFICATIONS, PLANS, PROCEDURES, ARRANGEMENTS, AND METHODS COMPLY WITH ACT OF 1970 AND ALL RULES AND REGULATIONS THERETO APPURTENANT. THIS DRAWING AND THE DESIGN FEATURES OR CONSTRUCTION DISCLOSED ARE PROPRIETARY TO E2 PROJECT MANAGEMENT. LLC AND SHALL NOT BE REPRODUCED, ALTERED OR COPIED WITHOUT WRITTEN PERMISSION, SHALL NOT BE USED IN ANY MANNER DETRIMENTAL TO ITS INTEREST AND SHALL BE RETURNED UPON REQUEST.

N.J. ENGINEERING CERTIFICATE OF AUTHORIZATION No. 24GA28118200

I CERTIFY THAT THESE PLANS HAVE BEEN PREPARED UNDER MY SUPERVISION

CHARLES J. STEWART, P.E., P.L.S. N.J. NO. 24GB03588400
REGISTERED PROFESSIONAL ENGINEER AND LAND SURVEYOR

PROJECT NAME

YESHIVA NEW ACADEMY BUILDING

TAX LOT 1
BLOCK 134

21 ROCKVIEW AVENUE
BOROUGH OF NORTH PLAINFIELD
SOMERSET COUNTY, NJ

DRAWING TITLE

LANDSCAPE PLAN

CHECKED BY: CS	DRAWN BY: ENS
SCALE: 1" = 20'	SHEET NO: 6 OF 15
PROJECT #: P-22-47-01	FIRST ISSUE: 8/24/2022

DRAWING NO.

SP-105.00

SELECTION AND HANDLING OF PLANT MATERIAL

1. CONTRACTOR TO VERIFY THAT PLANT LIST(S), PLANT SPECIES, AND QUANTITIES COORDINATE WITH PLANTING PLAN(S). WHERE A DESCREPANCY IS IDENTIFIED, QUANTITIES SPECIFIED ON THE PLAN WILL BE OBTAINED AND INSTALLED.
2. CONTRACTOR TO SUPPLY NURSERY SOURCE FOR ALL PLANT MATERIAL. PLANTS SHALL BE SOURCED FROM THE SAME GEOLOGICAL REGION.
3. PLANTS WITH UNDERSIZED OR BROKEN ROOT BALLS, EXCESSIVE CURLING AND/OR GIRDLING OF ROOTS, INJURY FROM ROUGH TREATMENT, OR DROUGHT STRESS WILL BE REJECTED.
4. PLEASE NOTE: IT IS THE RESPONSIBILITY OF THE CONTRACTOR TO GUARANTEE THAT THE ROOT BALLS ARE PROPERLY SIZED. PLEASE BE AWARE THAT FOR PROPER SIZING, EXCESS ALIEN SOIL SHALL BE REMOVED PRIOR TO DIGGING. SEE DIAGRAM 1.2.
5. ROOT BALLS SHALL BE KEPT MOIST AT ALL TIMES.
6. PLANTS SHALL BE COVERED DURING TRANSPORT TO PREVENT DESICCATION FROM WIND. IN WARM WEATHER PLANTS SHALL BE COVERED JUST PRIOR TO TRAVEL AND UNCOVERED IMMEDIATELY UPON REACHING DESTINATION TO AVOID HEAT BUILD UP UNDER THE TARP. PLANT MATERIAL SHALL NOT BE LEFT IN DIRECT SUNLIGHT OR ON HIGH HEAT ABSORPTION MATERIALS, SUCH AS BUT NOT LIMITED TO, ASPHALT AND/ OR METAL TRUCK BEDS TO PREVENT THE WILTING OF MATERIAL.
7. TREES SHALL BE MOVED BY THEIR ROOT BALL NOT THEIR TRUNK. TREES LARGER THAN 6" SHALL BE MOVED WITH PROPER STRAPPING SECURING ROOT BALL TO EQUIPMENT. WEAVE STRAPPING THROUGH THE LACING, NOT AROUND THE TRUNK. TREE TRUNK SHALL BE PROTECTED AT ALL TIME FROM COMPRESSION AND SEARING.
8. IF PLANTS ARE NOT PLANTED IMMEDIATELY ON SITE, PROPER CARE SHALL BE TAKEN:
   a. PLACE IN PARTIAL SHADE WHEN POSSIBLE.
   b. COVER ROOT BALL WITH MOISTENED MULCH OR AGED WOOD CHIPS.
   c. SUPPLY PROPER IRRIGATION AS NOT TO ALLOW THE ROOT BALL TO DRY OUT.
   d. UNTIE PLANT MATERIAL AND ALLOW PROPER SPACING OF PLANTS FOR AIR CIRCULATION TO PREVENT DISEASE, WILTING, AND LEAF LOSS AND FOR GENERAL HEATH OF PLANTS.
9. CONTRACTOR/NURSERY SHALL GUARANTEE HEALTH AND VIGOR OF ALL PLANT MATERIALS FOR A MINIMUM OF ONE (1) YEAR AFTER INSTALLATION.
10. ALL INSTALLED PLANT MATERIAL SHALL BE WATERED IN ACCORDANCE WITH THE WATERING SCHEDULE NOTED ON THE PLAN(S).

PERMANENT VEGETATIVE COVER FOR SOIL STABILIZATION

SITE PREPARATION

1. GRADE AS NEEDED AND FEASIBLE TO PERMIT THE USE OF CONVENTIONAL EQUIPMENT FOR SEEDBED PREPARATION, SEEDING, MULCH APPLICATION, AND MULCH ANCHORING. ALL GRADING SHOULD BE DONE IN ACCORDANCE WITH STANDARD FOR LAND GRADING.
2. IMMEDIATELY PRIOR TO SEEDING AND TOPSOIL APPLICATION, THE SUBSOIL SHALL BE EVALUATED FOR COMPACTION IN ACCORDANCE WITH THE STANDARD FOR LAND GRADING .
3. TOPSOIL SHOULD BE HANDLED ONLY WHEN IT IS DRY ENOUGH TO WORK WITHOUT DAMAGING THE SOIL STRUCTURE. A UNIFORM APPLICATION TO A DEPTH OF 5 INCHES (UNSETTLED) IS REQUIRED ON ALL SITES. TOPSOIL SHALL BE AMENDED WITH ORGANIC MATTER, AS NEEDED, IN ACCORDANCE WITH THE STANDARD FOR TOPSOILING.
4. INSTALL NEEDED EROSION CONTROL PRACTICES OR FACILITIES SUCH AS DIVERSIONS, GRADE-STABILIZATION STRUCTURES, CHANNEL STABILIZATION MEASURES, SEDIMENT BASINS, AND WATERWAYS.

SEEDBED PREPARATION

SOIL INTO THE SUBSOIL.

1. UNIFORMLY APPLY GROUND LIMESTONE AND FERTILIZER TO TOPSOIL WHICH HAS BEEN SPREAD AND FIRMED, ACCORDING TO SOIL TEST RECOMMENDATIONS SUCH AS OFFERED BY RUTGERS CO-OPERATIVE EXTENSION SOIL SAMPLE MAILERS ARE AVAILABLE FROM THE LOCAL RUTGERS COOPERATIVE EXTENSION OFFICES (HTTP://NJAES.RUTGERS.EDU/COUNTY/). FERTILIZER SHALL BE APPLIED AT THE RATE OF 500 POUNDS PER ACRE OR 11 POUNDS PER 1,000 SQUARE FEET OF 10-10-10 OR EQUIVALENT WITH 50% WATER INSOLUBLE NITROGEN UNLESS A SOIL TEST INDICATES OTHERWISE AND INCORPORATED INTO THE SURFACE 4 INCHES. IF FERTILIZER IS NOT INCORPORATED, APPLY ONE-HALF THE RATE DESCRIBED ABOVE DURING SEEDBED PREPARATION AND REPEAT ANOTHER ONE-HALF RATE APPLICATION OF THE SAME FERTILIZER WITHIN 3 TO 5 WEEKS AFTER SEEDING.
2. WORK LIME AND FERTILIZER INTO THE TOPSOIL AS NEARLY AS PRACTICAL TO A DEPTH OF 4 INCHES WITH 4-1 STANDARDS FOR SOIL EROSION AND SEDIMENT CONTROL IN NEW JERSEY JANUARY 2014 A DISC, SPRING-TOOTH HARROW, OR OTHER SUITABLE EQUIPMENT. THE FINAL HARROWING OR DISKING OPERATION SHOULD BE ON THE GENERAL CONTOUR. CONTINUE TILLAGE UNTIL A REASONABLE UNIFORM SEEDBED IS PREPARED.
3. HIGH ACID PRODUCING SOIL. SOILS HAVING A PH OF 4 OR LESS OR CONTAINING IRON SULFIDE SHALL BE COVERED WITH A MINIMUM OF 12 INCHES OF SOIL HAVING A PH OF 5 OR MORE BEFORE INITIATING SEEDBED REPARATION. SEE STANDARD FOR MANAGEMENT OF HIGH ACID-PRODUCING SOILS FOR SPECIFIC REQUIREMENTS.

SEEDING

1. SELECT A MIXTURE FROM TABLE 4-3 OR USE A MIXTURE RECOMMENDED BY RUTGERS COOPERATIVE EXTENSION OR NATURAL RESOURCES CONSERVATION SERVICE WHICH IS APPROVED BY THE SOIL CONSERVATION DISTRICT. SEED GERMINATION SHALL HAVE BEEN TESTED WITHIN 12 MONTHS OF THE PLANTING DATE. NO SEED SHALL BE ACCEPTED WITH A GERMINATION TEST DATE MORE THAN 12 MONTHS OLD UNLESS RETESTED.
   1.1. SEEDING RATES SPECIFIED ARE REQUIRED WHEN A REPORT OF COMPLIANCE IS REQUESTED PRIOR TO ACTUAL ESTABLISHMENT OF PERMANENT VEGETATION. UP TO 50% REDUCTION IN RATES MAY BE USED WHEN PERMANENT VEGETATION IS ESTABLISHED PRIOR TO A REPORT OF COMPLIANCE INSPECTION. THESE RATES APPLY TO ALL METHODS OF SEEDING. ESTABLISHING PERMANENT VEGETATION MEANS 80% VEGETATIVE COVERAGE WITH THE SPECIFIED SEED MIXTURE FOR THE SEEDED AREA AND MOWED ONCE.
   1.2. WARM-SEASON MIXTURES ARE GRASSES AND LEGUMES WHICH MAXIMIZE GROWTH AT HIGH TEMPERATURES, GENERALLY 85O F AND ABOVE. SEE TABLE 4-3 MIXTURES 1 TO 7. PLANTING= RATES FOR WARM-SEASON GRASSES SHALL BE THE AMOUNT OF PURE LIVE SEED (PLS) AS DETERMINED BY GERMINATION TESTING RESULTS.
   1.3. COOL-SEASON MIXTURES ARE GRASSES AND LEGUMES WHICH MAXIMIZE GROWTH AT TEMPERATURES BELOW 85O MANY GRASSES BECOME ACTIVE AT 65O SEE TABLE 4-3, MIXTURES 8-20. ADJUSTMENT OF PLANTING RATES TO COMPENSATE FOR THE AMOUNT OF PLS IS NOT REQUIRED FOR COOL SEASON GRASSES.
2. CONVENTIONAL SEEDING IS PERFORMED BY APPLYING SEED UNIFORMLY BY HAND, CYCLONE (CENTRIFUGAL) SEEDER, DROP SEEDER, DRILL OR CULTIPACKER SEEDER. EXCEPT FOR DRILLED, HYDROSEEDED OR CULTIPACKED SEEDINGS, SEED SHALL BE INCORPORATED INTO THE SOIL WITHIN 24 HOURS OF SEEDBED PREPARATION TO A DEPTH OF 1/4 TO 1/2 INCH, BY RAKING OR DRAGGING. DEPTH OF SEED PLACEMENT MAY BE 1/4 INCH DEEPER ON COARSE-TEXTURED SOIL.
3. AFTER SEEDING, FIRMING THE SOIL WITH A CORRUGATED ROLLER WILL ASSURE GOOD SEED-TO-SOIL CONTACT, RESTORE CAPILLARITY, AND IMPROVE SEEDLING EMERGENCE. THIS IS THE PREFERRED METHOD. WHEN PERFORMED ON THE CONTOUR, SHEET EROSION WILL BE MINIMIZED AND WATER CONSERVATION ON SITE WILL BE MAXIMIZED.
4. HYDROSEEDING IS A BROADCAST SEEDING METHOD USUALLY INVOLVING A TRUCK, OR TRAILER-MOUNTED TANK, WITH AN AGITATION SYSTEM AND HYDRAULIC PUMP FOR MIXING SEED, WATER AND FERTILIZER AND SPRAYING THE MIX ONTO THE PREPARED SEEDBED. MULCH SHALL NOT BE INCLUDED IN THE TANK WITH SEED. SHORTFIBERED MULCH MAY BE APPLIED WITH A HYDROSEEDER FOLLOWING SEEDING. (ALSO SEE SECTION 4-MULCHING BELOW). HYDROSEEDING IS NOT A PREFERRED SEEDING METHOD BECAUSE SEED AND FERTILIZER ARE APPLIED TO THE SURFACE AND NOT INCORPORATED INTO THE SOIL. WHEN POOR SEED TO SOIL CONTACT OCCURS, THERE IS A REDUCED SEED GERMINATION AND GROWTH.

STANDARD ROOT BALL SIZES FOR NURSERY-GROWN SHADE TREES

CALIPER* (IN.)	HEIGHT RANGE (FT-IN.)	MAX. HEIGHT (FT)	MIN. BALL DIA. (IN.)	MIN. BALL DEPTH (IN.)
1/2	5-6	8	12	9
3/4	6-8	10	14	10 1/2
1	8-10	11	16	12
1 1/4	8-10	12	18	13 1/2
1 1/2	10-12	14	20	13 1/2
1 3/4	10-12	14	22	14 1/2
2	12-14	16	24	16
2 1/2	12-14	16	28	18 1/2
3	14-16	18	32	19 1/2
3 1/2	14-16	18	38	23
4	16-18	22	42	25
5	18-20	26	54	32 1/2

* UP TO AND INCLUDING THE 4-IN. CALIPER SIZE, THE CALIPER MEASUREMENT INDICATES THE DIAMETER OF THE TRUNK 6 IN. ABOVE GROUND LEVEL. FOR LARGER SIZES, THE CALIPER MEASUREMENT IS TAKEN 12 IN. ABOVE GROUND LEVEL.

NOTES:

1. SEE AMERICAN STANDARD FOR NURSERY STOCK, ANSI Z60.1, FOR COMPLETE LIST OF NURSERY STANDARDS FOR OTHER TYPES AND SIZES OF TREES AND SHRUBS.

2. SEE INTERNATIONAL SOCIETY OF ARCHITECTURE'S "PRINCIPLES AND PRACTICES OF PLANTING TREES AND SHRUBS." 1997

SOIL IMPROVEMENT

THE QUALITY OF SOIL AVAILABLE FOR PLANTING VARIES WIDELY FROM SITE TO SITE, ESPECIALLY AFTER CONSTRUCTION ACTIVITY HAS OCCURRED. THE NATURE OF CONSTRUCTION RESULTS IN COMPACTION, FILLING, CONTAMINATION, AND GRADING OF THE ORIGINAL SOIL ON A SITE, RAPIDLY MAKING IT USELESS FOR PLANTING. PREVIOUS HUMAN ACTIVITY AT A SITE CAN ALSO AFFECT THE ABILITY OF THE SOIL TO SUPPORT PLANTS.

DURING THE DESIGN PHASE, ASSUMPTIONS MUST BE MADE REGARDING THE PROBABLE CONDITION OF THE SOIL AFTER CONSTRUCTION IS COMPLETE. THE HEALTH OF EXISTING OR REMAINING SOIL DETERIMINES WHAT TYPES OF SOIL PREPARATION WILL BE REQUIRED AND THE VOLUME OF SOIL TO BE PREPARED. CONDITIONS WILL VARY FROM LOCATION TO LOCATION WITHIN A PROJECT, AND DETAILS MUST BE CONDITION-SPECIFIC. FOR LARGE PROJECTS OR EXTREME CONDITIONS, IT IS USEFUL TO CONSULT AN EXPERT EXPERIENCED IN MODIFYING PLANTING SOILS AT URBAN SITES.

NOTES:

1. IF SITE OR DESIGN CONSTRAINTS PROHIBIT USE OF THE DIMENSIONS SHOWN IN THE PLANTING DETAILS, FOLLOW THE GUIDELINES FOR PLANTING IN URBAN AREAS.

2. WHENEVER POSSIBLE THE SOIL IMPROVEMENT AREA SHOULD BE CONNECTED FROM TREE TO TREE.

3. ALWAYS TEST SOIL FOR PH AND NUTRIENT LEVELS AND ADJUST THESE AS REQUIRED.

4. LOOSEN SOIL WITH A BACKHOE OR OTHER LARGE COARSE-TILING EQUIPMENT WHEN POSSIBLE. TILING THAT PRODUCES LARGE, COARSE CHUNKS OF SOIL IS PREFERABLE TO TILING THAT RESULTS IN FINE GRAINS UNIFORM IN TEXTURE.

5. THE BOTTOM OF PLANTING SOIL EXCAVATIONS SHOULD BE ROUGH TO AVOID MATTING OF SOIL LAYERS AS NEW SOIL IS ADDED. IT IS PREFERABLE TO FILL THE FIRST LIFT (2 TO 3 IN.) OF PLANTING

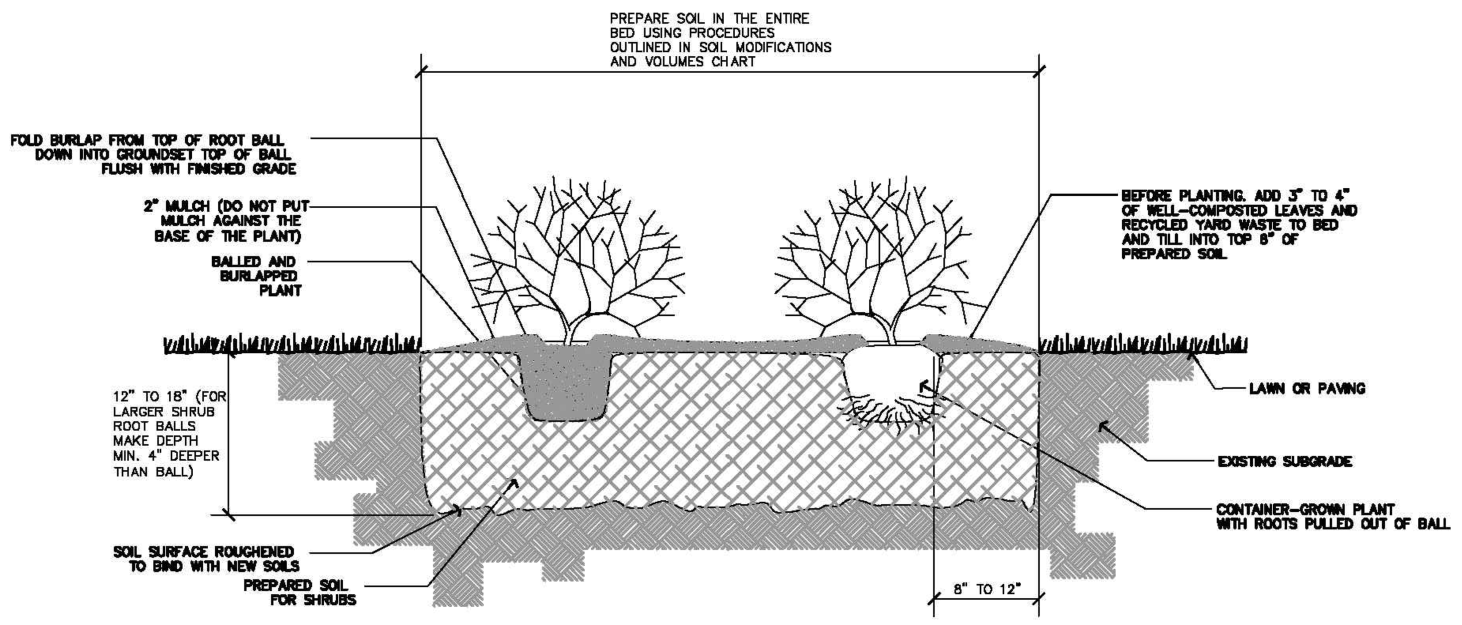

NOTES:

1. FOR CONTAINER-GROWN SHRUBS. USE FINGERS OR SMALL HAND TOOLS TO PULL THE ROOTS OUT OF THE OUTER LAYER OF POTTING SOIL; THEN CUT OR PULL APART ANY ROOTS THAT CIRCLE THE PERIMETER OF THE CONTAINER.

2. INCORPORATE COMMERCIALLY PREPARED MYCORRHIZAE SPORES IN THE SOIL IMMEDIATELY AROUND THE ROOT BALL AT RATES SPECIFIED BY THE MANUFACTURER.

3. CONFIRM THAT WATER DRAINS OUT OF THE SOIL DURING THE DESIGN PHASE; DESIGN ALTERNATIVE DRAINAGE SYSTEMS AS REQUIRED.

4. CONFIRM THAT THE SOIL ON TOP OF THE ROOT BALL IS AT THE ORIGINAL GRADE IN WHICH THE PLANT WAS ORIGINALLY PLANTED. REMOVE ALL SOIL ABOVE THE TRUNK FLARE.

SHRUB PLANTING (1 / SP-106)

N.T.S.

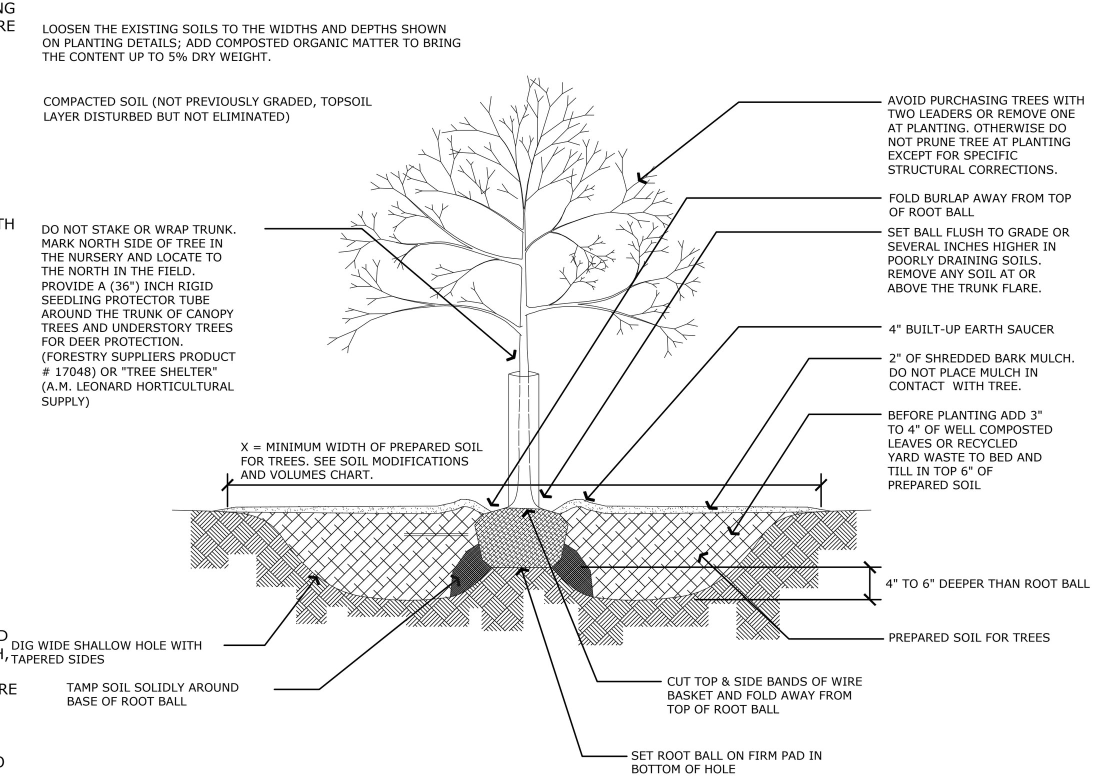

NOTES:

1. FOR CONTAINER GROWN TREES USE FINGERS OR SMALL HAND TOOLS TO PULL THE ROOTS OUT OF THE OUTER LAYER OF POTTING SOIL, THEN CUT OR PULL APART ANY ROOTS CIRCLING THE PERIMETER OF THE CONTAINER.

2. INCORPORATE COMMERCIALLY PREPARED MYCORRHIZAE SPORES IN THE SOIL IMMEDIATELY AROUND THE ROOT BALL AT RATE SPECIFIED BY THE MANUFACTURER.

3. PRIOR TO INSTALLATION CONFIRM THE SOILS WILL DRAIN PROPERLY. IF NECESSARY PROVIDE PROPER DRAINAGE.

4. THOROUGHLY SOAK THE ROOT BALL AND THE ADJACENT PREPARED SOIL SEVERAL TIMES DURING THE FIRST MONTH AFTER PLANTING AND REGULARLY THROUGHOUT THE FOLLOWING TWO SUMMERS.

5. THE PLANTING PROCESS IS SIMILAR FOR DECIDUOUS AND EVERGREEN TREES.

TREE PLANTING DETAIL (2 / SP-106)

N.T.S.

PERMANENT VEGETATIVE MIXTURES, PLANTING RATES AND PLANTING DATES

SEED MIXTURE	PLANTING RATES		PLANTING DATES (O - OPTIMAL PLANTING PERIOD A - ACCEPTABLE PLANTING PERIOD) / PLANT HARIDNESS ZONE									MAINTENANCE LEVEL	REMARKS
			ZONE 5B, 6A			ZONE 6B			ZONE 7A, 7B				
	LBS/ ACRE	LBS/1000 SQ.FT.	3/15 -5/31	6/1 -7/31	8/1 -10/1	3/1 -4/30	5/1 -8/14	8/15 -10/15	2/1 -4/30	5/1 -8/14	8/15 -10/30		
WARM SEASON MIXTURE #4													
SWITCHGRASS	10	.25	O			O			O			C-D	NATIVE WARM SEASON MIXTURE
BIG BLUESTEM	5	.10											
LITTLE BLUESTEM	5	.10											
SAND LOVEGRASS	4	.10											
COSTAL PANICGRASS	10	.20											
COOL SEASON MIXTURE #7													
STRONG CREEPING RED FESCUE	130	3	A	A	O	A	A	O	A	A	O	B-D	SUITABLE WATERWAY MIX. CANADA BLUEGRASS MORE DROUGHT TOLERANT USE REDTOP FOR INCREASED DROUGHT TOLERANCE
KENTUCKY BLUEGRASS	50	1											
PERENNIAL RYEGRASS OR	20	.60											
REDTOP	10	.25											
PLUS WHITE CLOVER	5	.10											

WATERING SCHEDULE

Maintenance Item	Schedule	Rate	Inspection Requirement	Maintenance Requirement
Watering	Weekly – Early Morning	Minimum One (1) Inch	Weekly – During First Growing Season or Until Vegetation Becomes Established. Inspect for Dry Soils, Wilted Vegetation.	Increase Watering Frequency / Rate to Maintain Soil Moisture and Plant Vigor.

SCHEDULE OF REVISIONS

1.	03/08/2023	REVISED PER HPC MEETING	ENS	CJS

OWNER/APPLICANT
YESHIVA TIFERES BORUCH, INC.
112 LINDEN AVENUE
NORTH PLAINFIELD, NJ 07060

E 2 PROJECT MANAGEMENT LLC
87 HIBERNIA AVENUE
ROCKAWAY, N.J. 07866
PHONE: (973) 299-5200
FAX: (973) 299-5059
www.E2PM.com

THIS DRAWING DOES NOT INCLUDE NECESSARY COMPONENTS FOR CONSTRUCTION SAFETY. ALL CONSTRUCTION MUST BE DONE IN COMPLIANCE WITH THE OCCUPATIONAL SAFETY AND HEALTH ACT OF 1970 AND ALL RULES AND REGULATIONS THERETO APPURTENANT. THIS DRAWING AND THE DESIGN FEATURES OR CONSTRUCTION DISCLOSED ARE PROPRIETARY TO E2 PROJECT MANAGEMENT LLC AND SHALL NOT BE REPRODUCED, ALTERED OR COPIED WITHOUT WRITTEN PERMISSION, SHALL NOT BE USED IN ANY MANNER DETRIMENTAL TO ITS INTEREST AND SHALL BE RETURNED UPON REQUEST.

N.J. ENGINEERING CERTIFICATE OF AUTHORIZATION No. 24GA28118200

I CERTIFY THAT THESE PLANS HAVE BEEN PREPARED UNDER MY SUPERVISION

CHARLES J. STEWART, P.E., P.L.S. N.J. NO. 24GB03588400
REGISTERED PROFESSIONAL ENGINEER AND LAND SURVEYOR

PROJECT NAME

YESHIVA NEW ACADEMY BUILDING

TAX LOT 1
BLOCK 134

21 ROCKVIEW AVENUE
BOROUGH OF NORTH PLAINFIELD
SOMERSET COUNTY, NJ

DRAWING TITLE

LANDSCAPING DETAILS

CHECKED BY: CS	DRAWN BY: ENS
SCALE: AS SHOWN	SHEET NO: 7 OF 15
PROJECT #: P-22-47-01	FIRST ISSUE: 8/24/2022

DRAWING NO.

SP-106.00

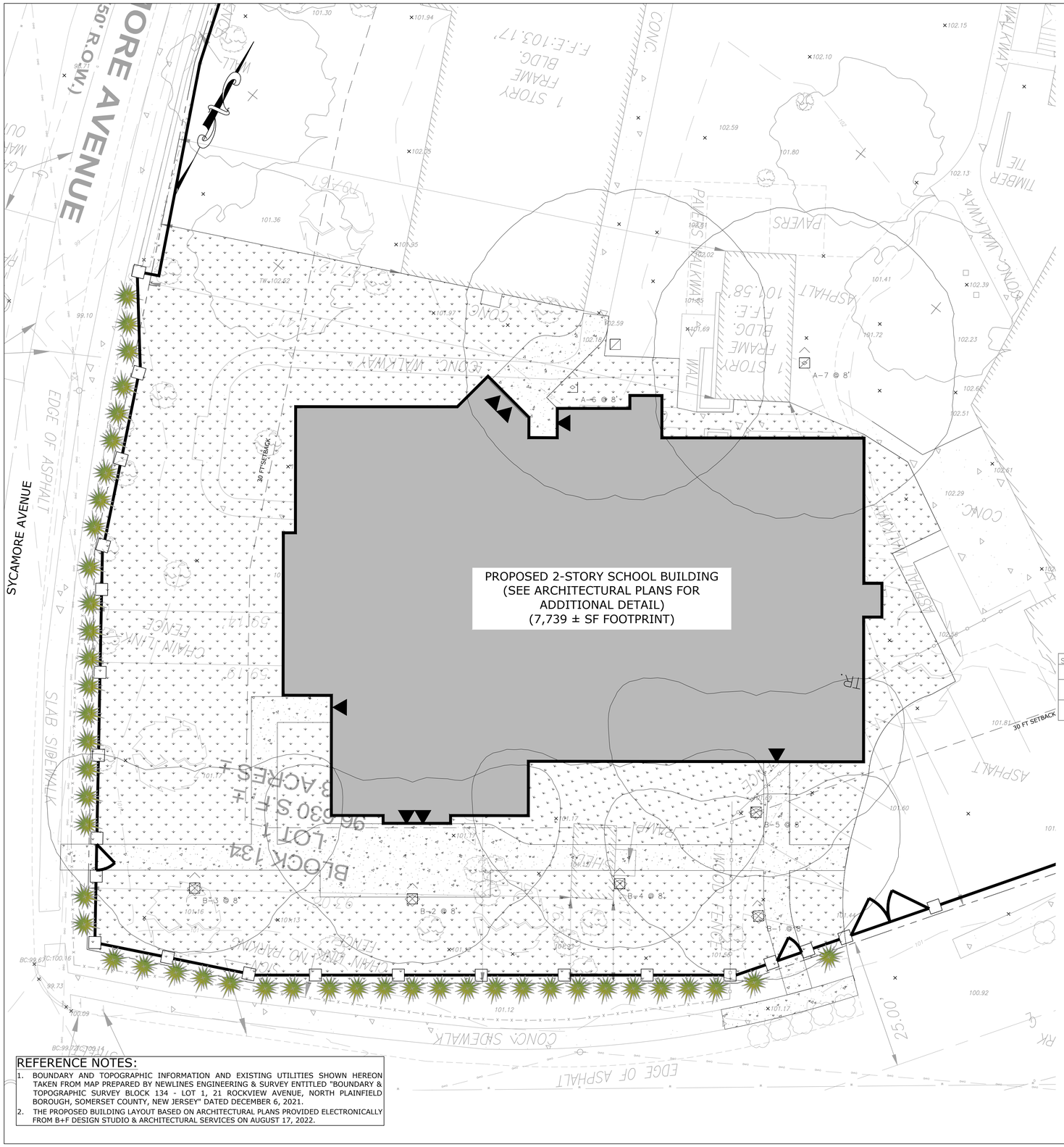

REFERENCE NOTES:

1. BOUNDARY AND TOPOGRAPHIC INFORMATION AND EXISTING UTILITIES SHOWN HEREON TAKEN FROM MAP PREPARED BY NEWLINES ENGINEERING & SURVEY ENTITLED "BOUNDARY & TOPOGRAPHIC SURVEY BLOCK 134 - LOT 1, 21 ROCKVIEW AVENUE, NORTH PLAINFIELD BOROUGH, SOMERSET COUNTY, NEW JERSEY" DATED DECEMBER 6, 2021.
2. THE PROPOSED BUILDING LAYOUT BASED ON ARCHITECTURAL PLANS PROVIDED ELECTRONICALLY FROM B+F DESIGN STUDIO & ARCHITECTURAL SERVICES ON AUGUST 17, 2022.

Luminaire Locations

		Location				
No.	Label	X	Y	Z	MH	Tilt
1	B	81.77	-20.20	8.00	8.00	0.00
2	B	15.00	-17.00	8.00	8.00	0.00
3	B	-27.00	-15.00	8.00	8.00	0.00
4	B	55.00	-14.00	8.00	8.00	0.00
5	B	81.30	-0.20	8.00	8.00	0.00
6	A	45.75	81.75	8.00	8.00	0.00
7	A	90.50	86.50	8.00	8.00	0.00

Statistics

Description	Symbol	Avg	Max	Min	Max/Min	Avg/Min
PARKING LOT		0.1 fc	1.0 fc	0.0 fc	N/A	N/A
SIDEWALK		2.6 fc	5.6 fc	1.0 fc	5.6:1	2.6:1
SITE CALCULATIONS		0.3 fc	5.6 fc	0.0 fc	N/A	N/A

Schedule

Symbol	Label	QTY	Manufacturer	Catalog	Description	Number Lamps	Lamp Output	LLF	Input Power
	A	2	Holophane	AUCL2 P20 27K XX FCO	Utility Arlington FCO LED 2, P20, 2700K, Type 5 Optic	1	3903	0.9	45
	B	5	Holophane	AUCL2 P20 27K XX FCO HSS	Utility Arlington FCO LED 2, P20, 2700K, Type 3 Optic, with House Side Shield	1	2644	0.9	45

Note

1. Readings shown are based on a total LLF of as shown at grade. Data references the extrapolated performance projections in a 25c ambient based on 10,000 hrs of LED testing (per IESNA LM-80-08 and projected per IESNA TM-21-11).
2. Please refer to the "luminaire locations" table for mounting heights.
3. Product information can be obtained at www.Acuity Brands.com

0 5' 10' 20'
SCALE: 1"=10'

SCHEDULE OF REVISIONS

1.	03/08/2023	REVISED PER HPC MEETING	ENS	CJS

OWNER/APPLICANT
YESHIVA TIFERES BORUCH, INC.
112 LINDEN AVENUE
NORTH PLAINFIELD, NJ 07060

E 2 PROJECT MANAGEMENT LLC

87 HIBERNIA AVENUE
ROCKAWAY, N.J. 07866
PHONE: (973) 299-5200
FAX: (973) 299-5059
www.E2PM.com

THIS DRAWING DOES NOT INCLUDE NECESSARY COMPONENTS FOR CONSTRUCTION SAFETY. ALL DRAWINGS, SPECS, IDEAS, DESIGNS, ARRANGEMENTS AND PLANS PROTECTED UNDER THE COPYRIGHT ACT OF 1970 AND ALL RULES AND REGULATIONS THERETO APPURTENANT. THIS DRAWING AND THE DESIGN FEATURES OR CONSTRUCTION DISCLOSED ARE PROPRIETARY TO E2 PROJECT MANAGEMENT, LLC AND SHALL NOT BE REPRODUCED, ALTERED OR COPIED WITHOUT WRITTEN PERMISSION, SHALL NOT BE USED IN ANY MANNER DETRIMENTAL TO ITS INTEREST AND SHALL BE RETURNED UPON REQUEST.

N.J. ENGINEERING CERTIFICATE OF AUTHORIZATION No. 24GA28118200

I CERTIFY THAT THESE PLANS HAVE BEEN PREPARED UNDER MY SUPERVISION

CHARLES J. STEWART, P.E., P.L.S. N.J. NO. 24GB03588400
REGISTERED PROFESSIONAL ENGINEER AND LAND SURVEYOR

PROJECT NAME

YESHIVA NEW ACADEMY BUILDING

TAX LOT 1
BLOCK 134

21 ROCKVIEW AVENUE
BOROUGH OF NORTH PLAINFIELD
SOMERSET COUNTY, NJ

DRAWING TITLE

LIGHTING PLAN

CHECKED BY: CS	DRAWN BY: ENS
SCALE: 1" = 10'	SHEET NO: 8 OF 15
PROJECT #: P-22-47-01	FIRST ISSUE: 8/24/2022

DRAWING NO.

SP-107.00

NPC

Nicoma Park™ Cast Iron Pole

HOLOPHANE

DIMENSIONAL DATA

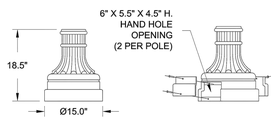

SHAFT STYLE

FTN, .375 Wall

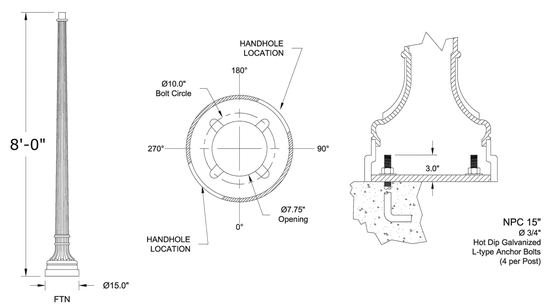

POLE HEIGHT RANGE (for 12" diameter base)

FTN
10'

© 2011-2022 Acuity Brands Lighting, Inc. All rights reserved. Rev. 12/29/22 Specifications subject to change without notice.

1 SP-108 LIGHT POLE DETAIL AND CUT SHEET

SCALE: N.T.S.

DIMENSIONAL DATA

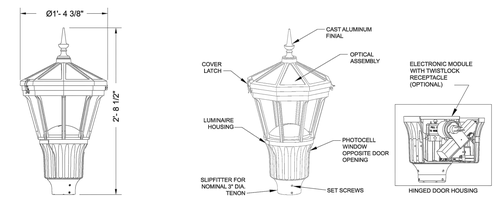

Maximum Weight - 40 lbs
Maximum Effective Projected Area - 1.38 sq. ft.

AUCL2 UTILITY ARLINGTON SERIES LUMINAIRE FULL CUTOFF LED2 WITH 2700K CCT COLOR TEMPERATURE

2 SP-108 LIGHT FIXTURE DETAIL

SCALE: N.T.S.

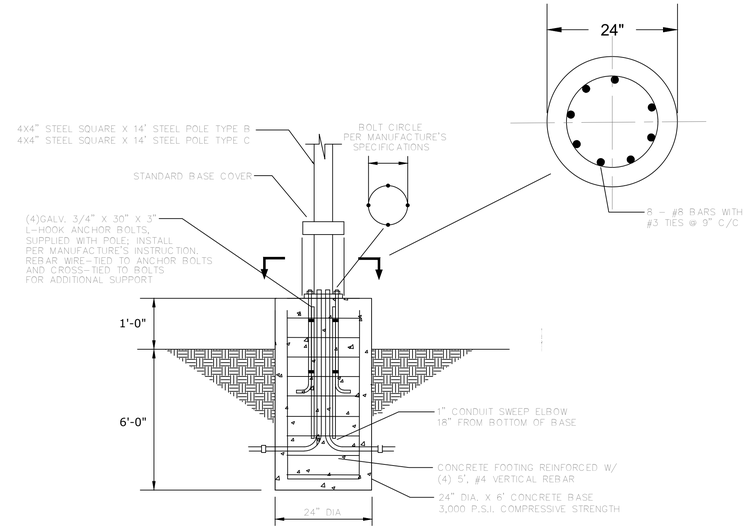

3 SP-108 LIGHT POLE FOUNDATION

SCALE: N.T.S.

SCHEDULE OF REVISIONS

1.	03/08/2023	REVISED PER HPC MEETING	ENS	CJS

OWNER/APPLICANT

YESHIVA TIFERES BORUCH, INC.
112 LINDEN AVENUE
NORTH PLAINFIELD, NJ 07060

E 2 PROJECT MANAGEMENT LLC

87 HIBERNIA AVENUE
ROCKAWAY, N.J. 07866
PHONE: (973) 299-5200
FAX: (973) 299-5059
www.E2PM.com

THIS DRAWING DOES NOT INCLUDE NECESSARY COMPONENTS FOR CONSTRUCTION SAFETY. ALL CONSTRUCTION WORK SHALL BE PERFORMED IN ACCORDANCE WITH OSHA STANDARDS AND THE ACT OF 1970 AND ALL RULES AND REGULATIONS THERETO APPURTENANT. THIS DRAWING AND THE DESIGN FEATURES OR CONSTRUCTION DISCLOSED ARE PROPRIETARY TO E2 PROJECT MANAGEMENT LLC AND SHALL NOT BE REPRODUCED, ALTERED OR COPIED WITHOUT WRITTEN PERMISSION, SHALL NOT BE USED IN ANY MANNER DETRIMENTAL TO ITS INTEREST AND SHALL BE RETURNED UPON REQUEST.

N.J. ENGINEERING CERTIFICATE OF AUTHORIZATION No. 24GA28118200

I CERTIFY THAT THESE PLANS HAVE BEEN PREPARED UNDER MY SUPERVISION

CHARLES J. STEWART, P.E., P.L.S. N.J. NO. 24GB03588400
REGISTERED PROFESSIONAL ENGINEER AND LAND SURVEYOR

PROJECT NAME

YESHIVA NEW ACADEMY BUILDING

TAX LOT 1
BLOCK 134

21 ROCKVIEW AVENUE
BOROUGH OF NORTH PLAINFIELD
SOMERSET COUNTY, NJ

DRAWING TITLE

LIGHTING DETAILS

CHECKED BY: CS	DRAWN BY: ENS
SCALE: AS NOTED	SHEET NO: 9 OF 15
PROJECT #: P-22-47-01	FIRST ISSUE: 8/24/2022

DRAWING NO.

SP-108.00

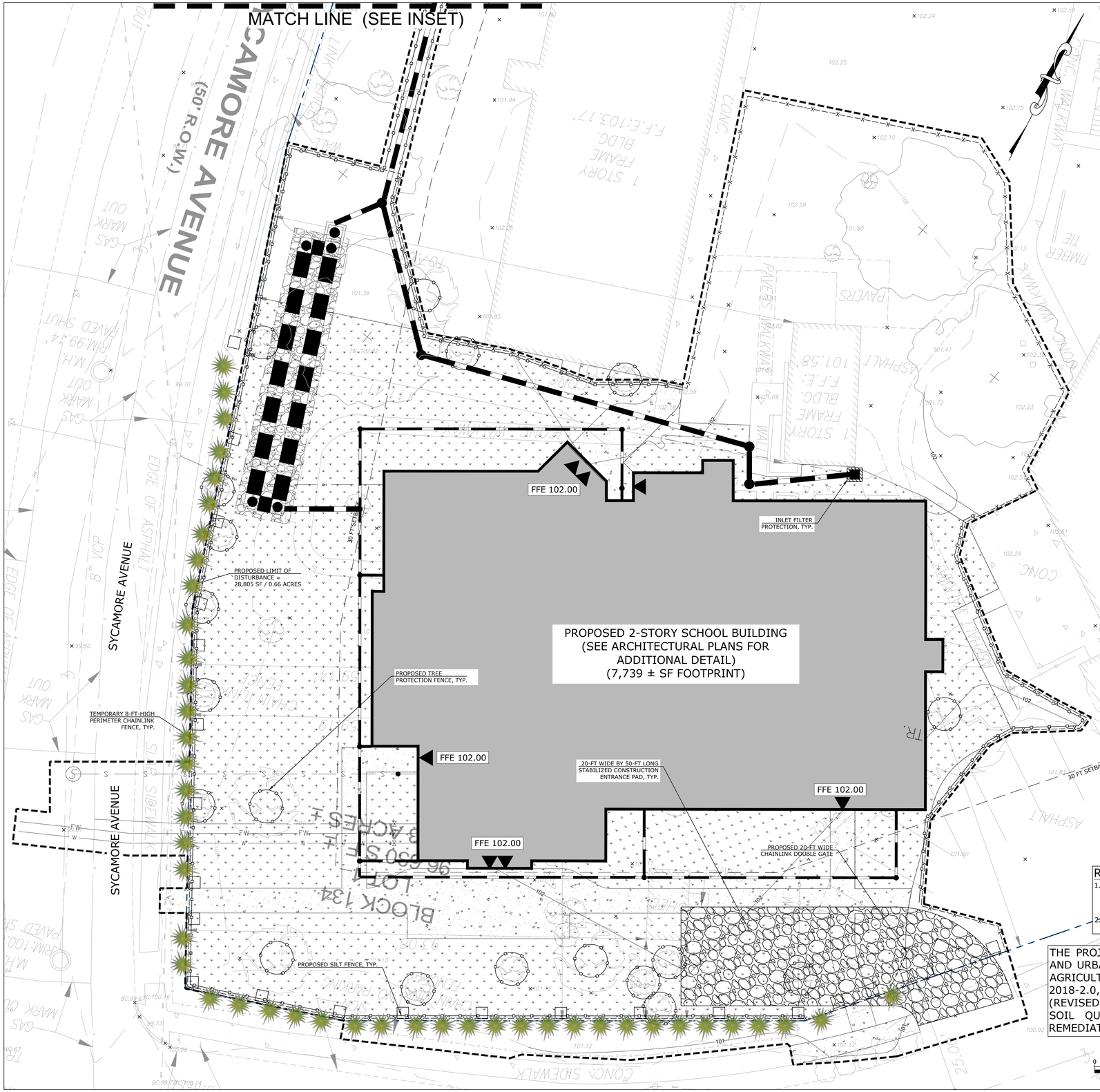

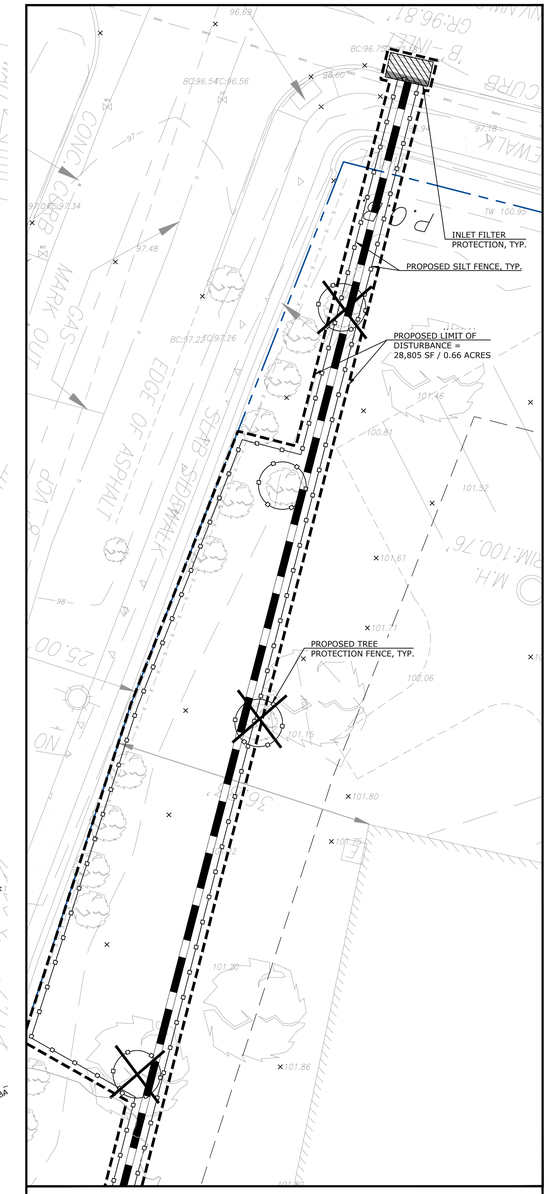

DRAINAGE INSET

REFERENCE NOTES:

1. BOUNDARY AND TOPOGRAPHIC INFORMATION AND EXISTING UTILITIES SHOWN HEREON TAKEN FROM MAP PREPARED BY NEWLINES ENGINEERING & SURVEY ENTITLED "BOUNDARY & TOPOGRAPHIC SURVEY BLOCK 134 - LOT 1, 21 ROCKVIEW AVENUE, NORTH PLAINFIELD BOROUGH, SOMERSET COUNTY, NEW JERSEY" DATED DECEMBER 6, 2021.
2. THE PROPOSED BUILDING LAYOUT BASED ON ARCHITECTURAL PLANS PROVIDED ELECTRONICALLY FROM B+F DESIGN STUDIO & ARCHITECTURAL SERVICES ON AUGUST 17, 2022.

THE PROJECT IS LOCATED WITHIN A METROPOLITAN PLANNING AREA (PA1) AND URBAN ENTERPRISE ZONE. AS SUCH, PER NEW JERSEY DEPARTMENT OF AGRICULTURE STATE SOIL CONSERVATION COMMITTEE TECHNICAL BULLETIN 2018-2.0, THE PROJECT IS EXEMPT FROM THE STANDARD FOR LAND GRADING (REVISED 2017) WHICH CONTAINS PROVISIONS FOR MEASURES TO IMPROVE SOIL QUALITY ON CONSTRUCTION SITES THROUGH TESTING AND/OR REMEDIATION OF EXCESSIVELY COMPACTED SOIL.

0 5' 10' 20'
SCALE: 1"=10'

SCHEDULE OF REVISIONS

1.	03/08/2023	REVISED PER HPC MEETING	ENS	CJS

OWNER/APPLICANT
YESHIVA TIFERES BORUCH, INC.
112 LINDEN AVENUE
NORTH PLAINFIELD, NJ 07060

E 2 PROJECT MANAGEMENT LLC

87 HIBERNIA AVENUE
ROCKAWAY, N.J. 07866
PHONE : (973) 299-5200
FAX: (973) 299-5059
www.E2PM.com

THIS DRAWING DOES NOT INCLUDE NECESSARY COMPONENTS FOR CONSTRUCTION SAFETY. ALL CONSTRUCTION WORK SHALL BE PERFORMED IN ACCORDANCE WITH ALL APPLICABLE OSHA STANDARDS, ACT OF 1970 AND ALL RULES AND REGULATIONS THERETO APPURTENANT. THIS DRAWING AND THE DESIGN FEATURES OR CONSTRUCTION DISCLOSED ARE PROPRIETARY TO E2 PROJECT MANAGEMENT, LLC. AND SHALL NOT BE REPRODUCED, ALTERED OR COPIED WITHOUT WRITTEN PERMISSION, SHALL NOT BE USED IN ANY MANNER DETRIMENTAL TO ITS INTEREST AND SHALL BE RETURNED UPON REQUEST.

N.J. ENGINEERING CERTIFICATE OF AUTHORIZATION No. 24GA28118200

I CERTIFY THAT THESE PLANS HAVE BEEN PREPARED UNDER MY SUPERVISION

CHARLES J. STEWART, P.E., P.L.S. N.J. NO. 24GB03588400
REGISTERED PROFESSIONAL ENGINEER AND LAND SURVEYOR

PROJECT NAME

YESHIVA NEW ACADEMY BUILDING

TAX LOT 1
BLOCK 134

21 ROCKVIEW AVENUE
BOROUGH OF NORTH PLAINFIELD
SOMERSET COUNTY, NJ

DRAWING TITLE

SOIL EROSION AND SEDIMENT CONTROL PLAN

CHECKED BY: CS	DRAWN BY: ENS
SCALE: 1" = 10'	SHEET NO: 10 OF 15
PROJECT #: P-22-47-01	FIRST ISSUE: 8/24/2022

DRAWING NO.

SP-109.00

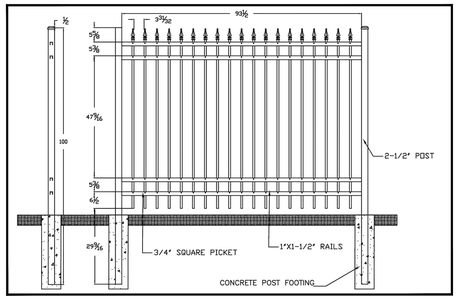

PROPOSED PERIMETER FENCE DETAIL

GATES TO BE AVANT SERIES C-1 TO MATCH FENCING. REFER TO FENCE RENDERING FOR SITE SPECIFIC LAYOUT SHOWING GATES FLANKED WITH STONE PILLARS AND FINIAL FINISH

PEDESTRIAN GATE

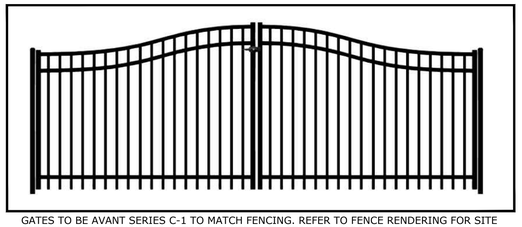

GATES TO BE AVANT SERIES C-1 TO MATCH FENCING. REFER TO FENCE RENDERING FOR SITE SPECIFIC LAYOUT SHOWING GATES FLANKED WITH STONE PILLARS AND FINIAL FINISH

VEHICULAR GATE

FENCE GATE RENDERING

FENCE RENDERING

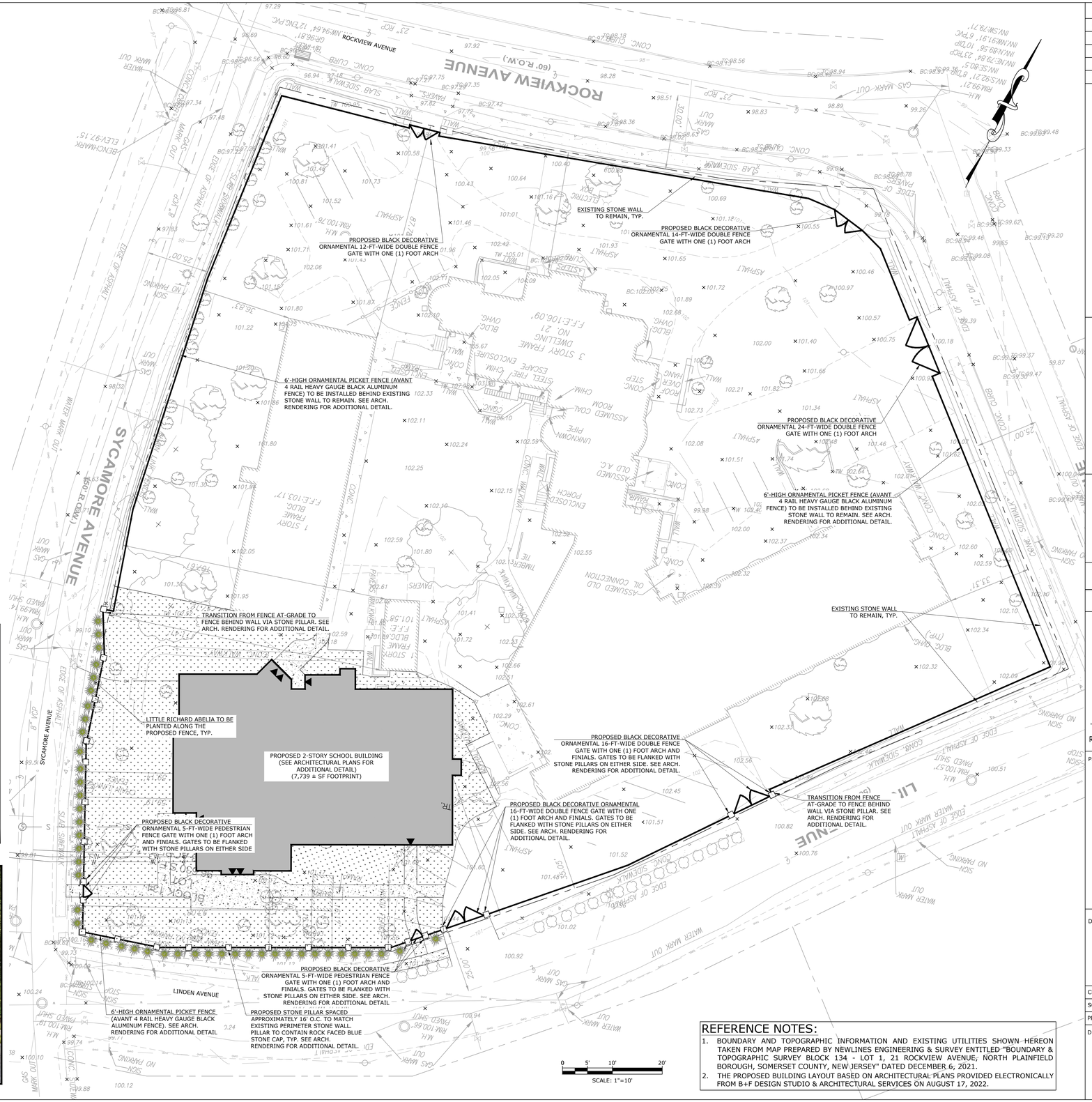

REFERENCE NOTES:

1. BOUNDARY AND TOPOGRAPHIC INFORMATION AND EXISTING UTILITIES SHOWN HEREON TAKEN FROM MAP PREPARED BY NEWLINES ENGINEERING & SURVEY ENTITLED "BOUNDARY & TOPOGRAPHIC SURVEY BLOCK 134 - LOT 1, 21 ROCKVIEW AVENUE, NORTH PLAINFIELD BOROUGH, SOMERSET COUNTY, NEW JERSEY" DATED DECEMBER 6, 2021.
2. THE PROPOSED BUILDING LAYOUT BASED ON ARCHITECTURAL PLANS PROVIDED ELECTRONICALLY FROM B+F DESIGN STUDIO & ARCHITECTURAL SERVICES ON AUGUST 17, 2022.

SCHEDULE OF REVISIONS

1.	03/08/2023	REVISED PER HPC MEETING	ENS	CJS

OWNER/APPLICANT
YESHIVA TIFERES BORUCH, INC.
112 LINDEN AVENUE
NORTH PLAINFIELD, NJ 07060

E 2 PROJECT MANAGEMENT LLC

87 HIBERNIA AVENUE
ROCKAWAY, N.J. 07866
PHONE : (973) 299-5200
FAX: (973) 299-5059
www.E2PM.com

THIS DRAWING DOES NOT INCLUDE NECESSARY COMPONENTS FOR CONSTRUCTION SAFETY. ALL DESIGNS, DRAWINGS, AND SPECIFICATIONS ARE THE PROPERTY AND PROPRIETARY TO E2 PROJECT MANAGEMENT LLC AND SHALL NOT BE REPRODUCED, ALTERED OR COPIED WITHOUT WRITTEN PERMISSION, SHALL NOT BE USED IN ANY MANNER DETRIMENTAL TO ITS INTEREST AND SHALL BE RETURNED UPON REQUEST.

N.J. ENGINEERING CERTIFICATE OF AUTHORIZATION No. 24GA28118200

I CERTIFY THAT THESE PLANS HAVE BEEN PREPARED UNDER MY SUPERVISION

CHARLES J. STEWART, P.E., P.L.S. N.J. NO. 24GB03588400
REGISTERED PROFESSIONAL ENGINEER AND LAND SURVEYOR

PROJECT NAME

YESHIVA NEW ACADEMY BUILDING

TAX LOT 1
BLOCK 134

21 ROCKVIEW AVENUE
BOROUGH OF NORTH PLAINFIELD
SOMERSET COUNTY, NJ

DRAWING TITLE

PROPOSED FENCE PLAN

CHECKED BY: CS	DRAWN BY: ENS
SCALE: 1" = 20'	SHEET NO: 11 OF 15
PROJECT #: P-22-47-01	FIRST ISSUE: 8/24/2022

DRAWING NO.

SP-110.00

SOMERSET-UNION SOIL CONSERVATION DISTRICT SOIL EROSION AND SEDIMENT CONTROL NOTES

1. THE SOMERSET-UNION SOIL CONSERVATION DISTRICT SHALL BE NOTIFIED IN WRITING 48 HOURS IN ADVANCE OF ANY LAND DISTURBING ACTIVITY.
2. ALL SOIL EROSION AND SEDIMENT CONTROL PRACTICES SHALL BE INSTALLED PRIOR TO ANY MAJOR SOIL DISTURBANCES, OR IN THEIR PROPER SEQUENCE AND MAINTAINED UNTIL PERMANENT PROTECTION IS ESTABLISHED.
3. ANY DISTURBED AREAS THAT WILL BE LEFT EXPOSED MORE THAN 30 DAYS AND NOT SUBJECT TO CONSTRUCTION TRAFFIC, WILL IMMEDIATELY RECEIVE A TEMPORARY SEEDING. IF THE SEASON PREVENTS THE ESTABLISHMENT OF A TEMPORARY COVER, THE DISTURBED AREAS WILL BE MULCHED WITH STRAW, OR EQUIVALENT MATERIAL, AT A RATE OF TWO (2) TONS PER ACRE, ACCORDING TO NJ STATE STANDARDS
4. PERMANENT VEGETATION SHALL BE SEEDED OR SODDED ON ALL EXPOSED AREAS WITHIN TEN (10) DAYS AFTER FINAL GRADING. MULCH WILL BE USED FOR PROTECTION UNTIL SEEDING IS ESTABLISHED
5. ALL WORK SHALL BE DONE IN ACCORDANCE WITH THE NJ STATE STANDARDS FOR SOIL EROSION AND SEDIMENT CONTROL IN NEW JERSEY.
6. A SUB-BASE COURSE WILL BE APPLIED IMMEDIATELY FOLLOWING ROUGH GRADING AND INSTALLATION OF IMPROVEMENTS IN ORDER TO STABILIZE STREETS, ROADS, DRIVEWAYS AND PARKING AREAS. IN AREAS WHERE NO UTILITIES ARE PRESENT, THE SUB-BASE SHALL BE INSTALLED WITHIN 15 DAYS OR PRELIMINARY GRADING.
7. IMMEDIATELY FOLLOWING INITIAL DISTURBANCE OR ROUGH GRADING ALL CRITICAL AREAS SUBJECT TO EROSION (I.E.: STEEP SLOPES, ROADWAY EMBANKMENTS) WILL RECEIVE A TEMPORARY SEEDING IN COMBINATION WITH STRAW MULCH OR A SUITABLE EQUIVALENT, AT A RATE OF TWO (2) TONS PER ACRE, ACCORDING TO THE NJ STATE STANDARDS.
8. ANY STEEP SLOPES RECEIVING PIPELINE INSTALLATION WILL BE BACKFILLED AND STABILIZED DAILY, AS THE INSTALLATION PROCEEDS (I.E.: SLOPES GREATER THAT 3:1)
9. TRAFFIC CONTROL STANDARDS REQUIRE THE INSTALLATION OF A 50'X30'X6''PAD OF 1 1/2" OR 2" STONE, AT ALL CONSTRUCTION DRIVEWAYS, IMMEDIATELY AFTER INITIAL SITE DISTURBANCE.
10. AT THE TIME WHEN THE SITE PREPARATION FOR PERMANENT VEGETATIVE STABILIZATION IS GOING TO BE ACCOMPLISHED, ANY SOIL THAT WILL NOT PROVIDE A SUITABLE ENVIRONMENT TO SUPPORT ADEQUATE VEGETATIVE GROUND COVER, SHALL BE REMOVED OR TREATED IN SUCH A WAY THAT WILL PERMANENTLY ADJUST THE SOIL CONDITIONS AND RENDER IT SUITABLE FOR VEGETATIVE GROUND COVER. IF THE REMOVAL OR TREATMENT OF THE SOIL WILL NOT PROVIDE SUITABLE CONDITIONS, NON-VEGETATIVE MEANS OF PERMANENT GROUND STABILIZATION WILL HAVE TO BE EMPLOYED.
11. IN THAT NJSA 4:24-39 ET SEQ., REQUIRES THAT NO CERTIFICATE OF OCCUPANCY BE ISSUED BEFORE THE PROVISIONS OF THE CERTIFIED PLAN FOR SOIL EROSION AND SEDIMENT CONTROL HAVE BEEN COMPLIED WITH FOR PERMANENT MEASURES, ALL SITE WORK FOR SITE PLANS AND ALL WORK AROUND INDIVIDUAL LOTS IN SUBDIVISIONS, WILL HAVE TO BE COMPLETED PRIOR TO THE DISTRICT ISSUING A REPORT OF COMPLIANCE FOR THE ISSUANCE OF A CERTIFICATE OF OCCUPANCY BY THE MUNICIPALITY.
12. CONDUIT OUTLET PROTECTION MUST BE INSTALLED AT ALL REQUIRED OUTFALLS PRIOR TO THE DRAINAGE SYSTEM BECOMING OPERATIONAL.
13. ANY CHANGES TO THE CERTIFIED SOIL EROSION AND SEDIMENT CONTROL PLAN WILL REQUIRE THE SUBMISSION OF REVISED SOIL EROSION AND SEDIMENT CONTROL PLANS TO THE DISTRICT FOR RE-CERTIFICATION. THE REVISED PLANS MUST MEET ALL CURRENT NJ STATE SOIL EROSION & SEDIMENT CONTROL STANDARDS.
14. THE SOMERSET-UNION SOIL CONSERVATION DISTRICT SHALL BE NOTIFIED OF ANY CHANGES IN OWNERSHIP.
15. MULCHING TO THE NJ STANDARDS IS REQUIRED FOR OBTAINING A CONDITIONAL REPORT OF COMPLIANCE. CONDITIONALS ARE ONLY ISSUED WHEN THE SEASON PROHIBITS SEEDING.
16. CONTRACTOR IS RESPONSIBLE FOR KEEPING ALL ADJACENT ROADS CLEAN DURING LIFE OF CONSTRUCTION PROJECT.
17. THE DEVELOPER SHALL BE RESPONSIBLE FOR REMEDIATING ANY EROSION OR SEDIMENT PROBLEMS THAT ARISE AS A RESULT OF ONGOING CONSTRUCTION AT THE REQUEST OF THE SOMERSET-UNION SOIL CONSERVATION DISTRICT.
18. HYDRO SEEDING IS A TWO- STEP PROCESS. THE FIRST STEP INCLUDES SEED, FERTILIZER, LIME, ETC., ALONG WITH MINIMAL AMOUNTS OF MULCH TO PROMOTE CONSISTENCY, GOOD SEED TO SOIL CONTACT, AND GIVE A VISUAL INDICATION OF COVERAGE. UPON COMPLETION OF SEEDING OPERATION, HYDRO-MULCH SHOULD BE APPLIED AT A RATE OF 1500 LBS. PER ACRE IN SECOND STEP. THE USE OF HYDRO-MULCH, AS OPPOSED TO STRAW, IS LIMITED TO OPTIMUM SEEDING DATES AS LISTED IN THE NJ STANDARDS.
19. UNFILTERED DEWATERING IS NOT PERMITTED. NECESSARY PRECAUTIONS MUST BE TAKEN DURING ALL DEWATERING OPERATIONS TO MINIMIZE SOIL TRANSFER. ANY DEWATERING METHODS USED MUST BE IN ACCORDANCE WITH THE STANDARD FOR DEWATERING.

TOPSOIL STOCKPILE PROTECTION: (APPLY DURING GROWING SEASON)

A) APPLY GROUND LIMESTONE AT A RATE OF 90 LBS. PER 1000 SQ. FT.
B) APPLY FERTILIZER (10–20–10) AT A RATE 11 LBS. PER 1000 SQ. FT.
C) APPLY PERENNIAL RYEGRASS SEED AT 1 LB. PER 1000 SQ. FT AND ANNUAL RYEGRASS AT 1 LB. PER 1000 SQ. FT.
D) MULCH STOCKPILE WITH STRAW OR HAY AT A RATE OF 90 LBS. PER 1000 SQ. FT.
E) APPLY A LIQUID MULCH BINDER OR TACK TO STRAW OR HAY MULCH
F) PROPERTY ENTRENCH A SILT FENCE AT THE BOTTOM OF THE STOCKPILE.

TEMPORARY STABILIZATION SPECIFICATIONS: (APPLY DURING GROWING SEASON)

A) APPLY GROUND LIMESTONE AT A RATE OF 90 LBS. PER 1000 SQ. FT.
B) APPLY FERTILIZER (10–20–10) AT A RATE 11 LBS. PER 1000 SQ. FT.
C) APPLY PERENNIAL RYEGRASS SEED AT 1 LB. PER 1000 SQ. FT AND ANNUAL RYEGRASS AT 1 LB. PER 1000 SQ. FT.
D) MULCH STOCKPILE WITH STRAW OR HAY AT A RATE OF 90 LBS. PER 1000 SQ. FT.
E) APPLY A LIQUID MULCH BINDER OR TACK TO STRAW OR MAY MULCH

PERMANENT STABILIZATION SPECIFICATIONS: (APPLY DURING GROWING SEASON)

A) APPLY TOPSOIL TO A DEPTH OF 5 INCHES (UNSETTLED)
B) APPLY GROUND LIMESTONE AT A RATE OF 90 LBS. PER 1000 SQ. FT. AND WORK FOUR INCHES INTO SOIL
C) APPLY FERTILIZER (10–20–00) AT A RATE 11 LBS. PER 1000 SQ. FT.
D) APPLY HARD FESCUE SEED AT 2.7 LBS. PER 1000 SQ. FT. AND CREEPING RED FESCUE SEED AT 0.7 LBS. PER 1000 SQ. FT. AND PERENNIAL RYEGRASS SEED AT 0.25 LBS. PER 1000 SQ. FT.
E) MULCH STOCKPILE WITH STRAW OR HAY AT A RATE OF 90 LBS PER 1000 SQ. FT.
F) APPLY A LIQUID MULCH BINDER OR TACK TO STRAW OR HAY MULCH.

SEEDING FOR NON–GROWING SEASON STABILIZATION:

A) APPLY GROUND LIMESTONE AT A RATE OF 90 LBS. PER 1000 SQ. FT.
B) APPLY FERTILIZER (10–20–10) AT A RATE 11 LBS. PER 1000 SQ. FT.
C) MULCH WITH UNROTTED SMALL–GRAIN STRAW OR SALT HAY AT 2 TONS PER ACRE SPREAD UNIFORMLY AT 90 LBS. PER 1000 SQ. FT.
D) APPLY A LIQUID MULCH BINDER SUCH AS ORGANIC AND VEGETABLE BASED BINDERS OR SYNTHETIC BINDERS IMMEDIATELY AFTER SEEDING. APPLY AT RATES AND WEATHER CONDITIONS RECOMMENDED BY THE MANUFACTURER.

REQUIREMENTS FOR DUST CONTROL:

1. CONTRACTOR SHALL EMPLOY MEASURES TO CONTROL BLOWING AND MOVEMENT OF DUST FROM EXPOSED SOIL SURFACES, AS NECESSARY.
2. METHODS FOR CONTROLLING DUST SHALL INCLUDE MULCHES, VEGETATIVE COVER, SPRAY–ON ADHESIVES, TILLAGE, SPRINKLING, BARRIERS, CALCIUM CHLORIDE, AND STONE COVER.
3. DUST CONTROLS SHALL COMPLY WITH STANDARDS FOR SOIL EROSION AND SEDIMENT CONTROL IN NEW JERSEY.

PERCENT SLOPE OF ROADWAY	LENGTH OF STONE REQUIRED	
	COURSE GRAINED SOILS	FINE GRAINED SOILS
0 TO 2%	50 FT	100 FT
2% TO 5%	100 FT	200 FT
>5%	ENTIRE SURFACE STABILIZED WITH FABC BASE COURSE [1]	

1. AS PRESCRIBED BY LOCAL ORDINANCE OR OTHER GOVERNING AUTHORITY.

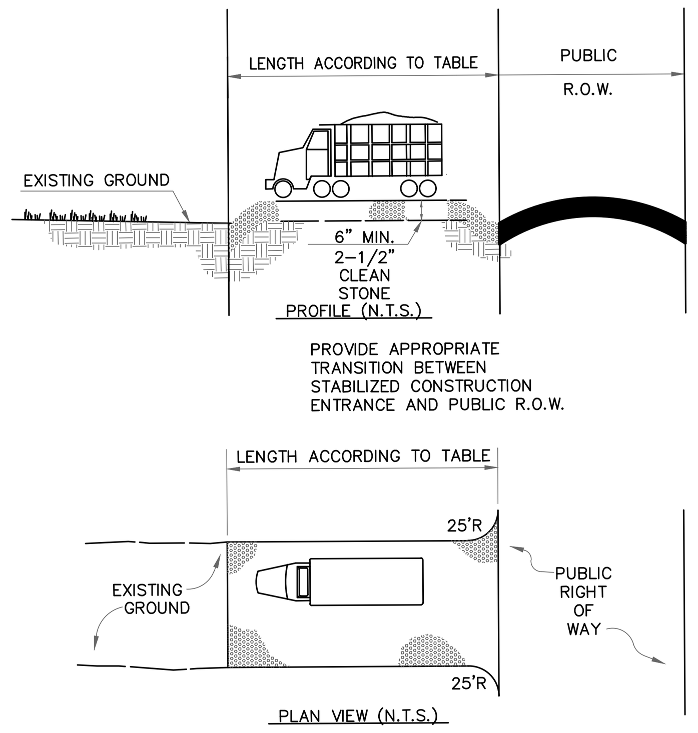

TEMPORARY STABILIZED CONSTRUCTION ENTRANCE
N.T.S.

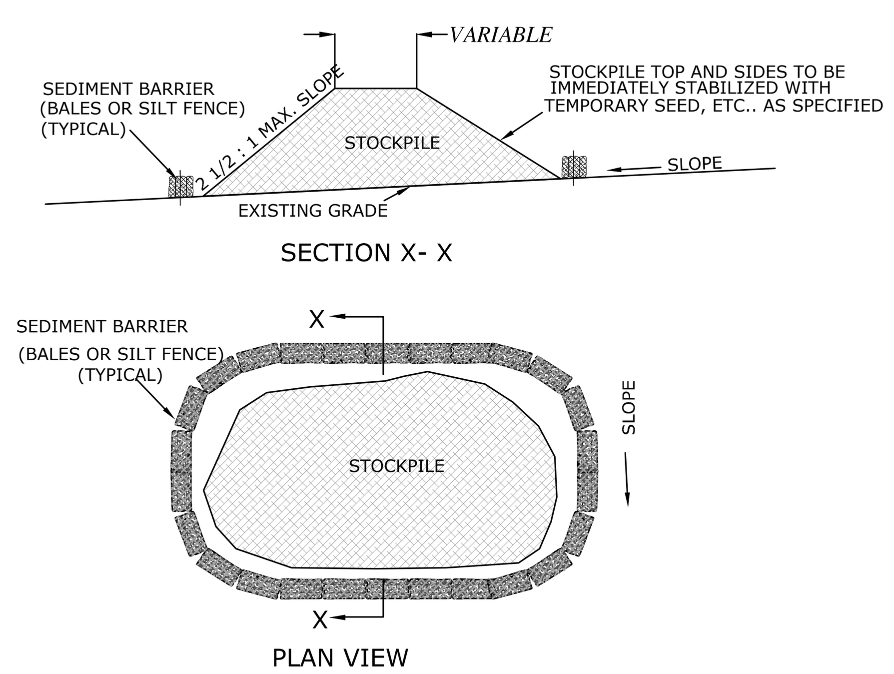

NOTES:
1. STOCKPILES TO BE PLACED AS DETERMINED IN THE FIELD.
2. STOCKPILES NOT TO BE PLACED IN AREA WITH CONCENTRATED FLOW, WETLANDS, EXTREME SLOPE, OR WITHIN 100 FEET OF A NATURAL STREAM.
3. TOPSOIL IS TO BE STOCKPILED SEPARATELY FROM OTHER EXCAVATED MATERIALS.

TYPICAL STOCKPILE CONSTRUCTION
N.T.S.

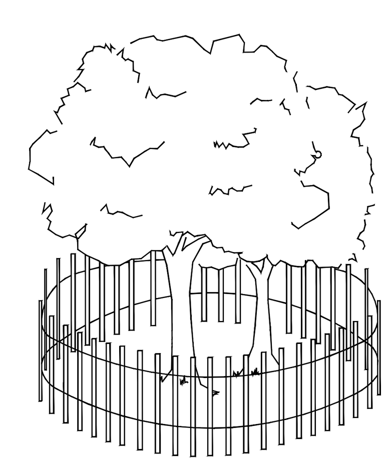

NOTE:
SNOW FENCE TO BE PLACED AT DRIP LINE OF TREES.

TREE PROTECTION FENCE
N.T.S.

SEQUENCE OF CONSTRUCTION

		WORK DAYS
1.	INSTALL FILTER FABRIC FENCING, INLET PROTECTION AND GRAVEL TRACKING BLANKET	2
2.	SITE CLEARING AND DEMOLITION	14
3.	DEMOLISH EXISTING BUILDINGS, STRUCTURES, PAVEMENT	30
4.	STRIP TOPSOIL AND STOCKPILE	2
5.	ROUGH GRADE SITE	3
6.	BUILDING CONSTRUCTION & SITE IMPROVEMENTS	240
7.	UTILITY CONSTRUCTION	21
8.	FINAL SITE GRADING	21
9.	GRADE OUT TOPSOIL, PERMANENT SEEDING AND PLANTING	7
10.	REMOVE ALL TEMPORARY SOIL EROSION MEASURES	3

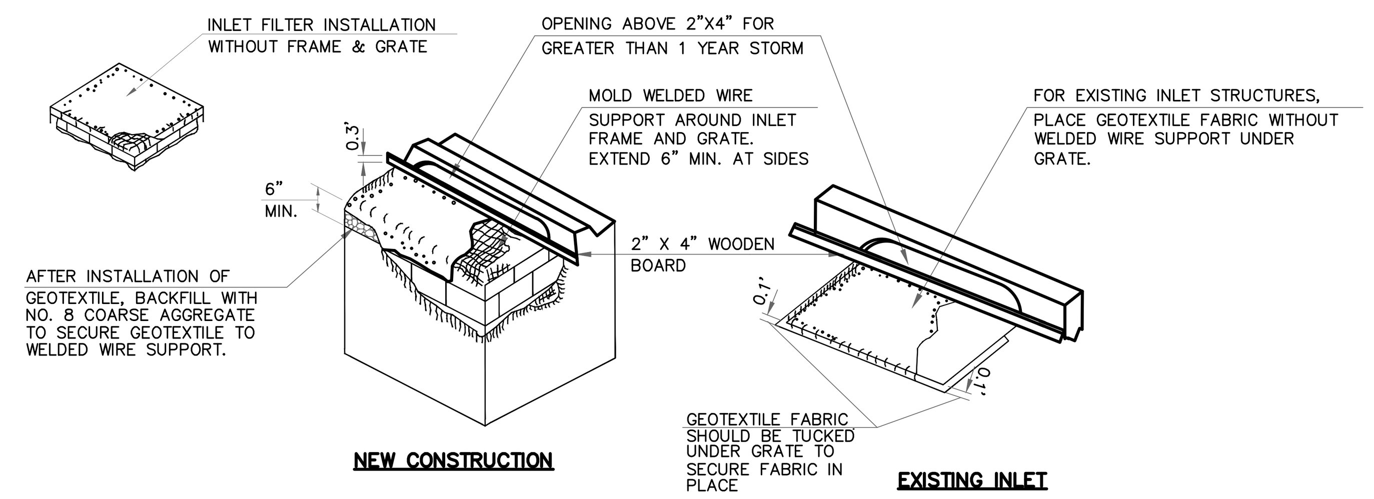

B–TYPE INLET FILTER
N.T.S.

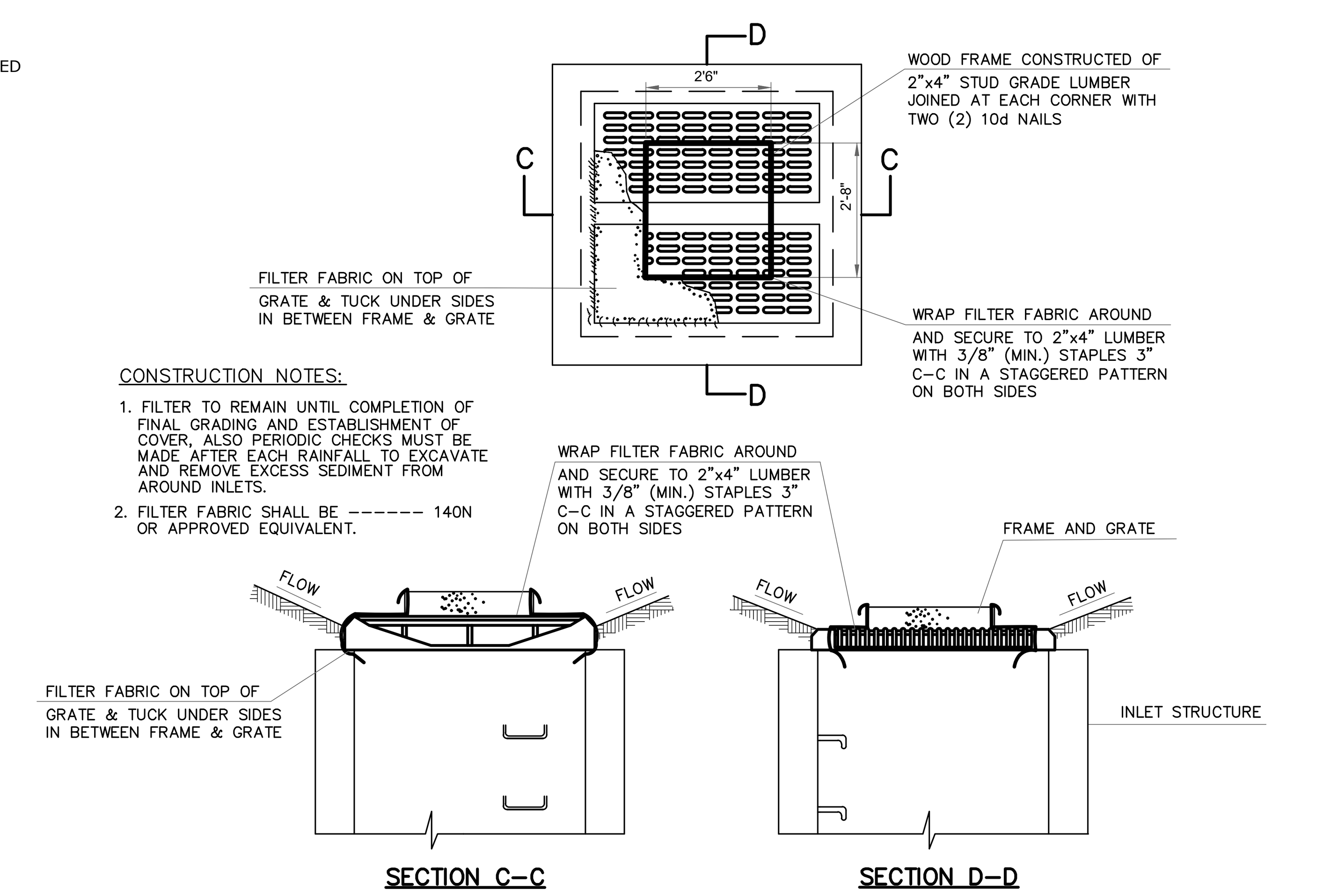

CONSTRUCTION NOTES:
1. FILTER TO REMAIN UNTIL COMPLETION OF FINAL GRADING AND ESTABLISHMENT OF COVER, ALSO PERIODIC CHECKS MUST BE MADE AFTER EACH RAINFALL TO EXCAVATE AND REMOVE EXCESS SEDIMENT FROM AROUND INLETS.
2. FILTER FABRIC SHALL BE –––––– 140N OR APPROVED EQUIVALENT.

A OR E–TYPE INLET FILTER
N.T.S.

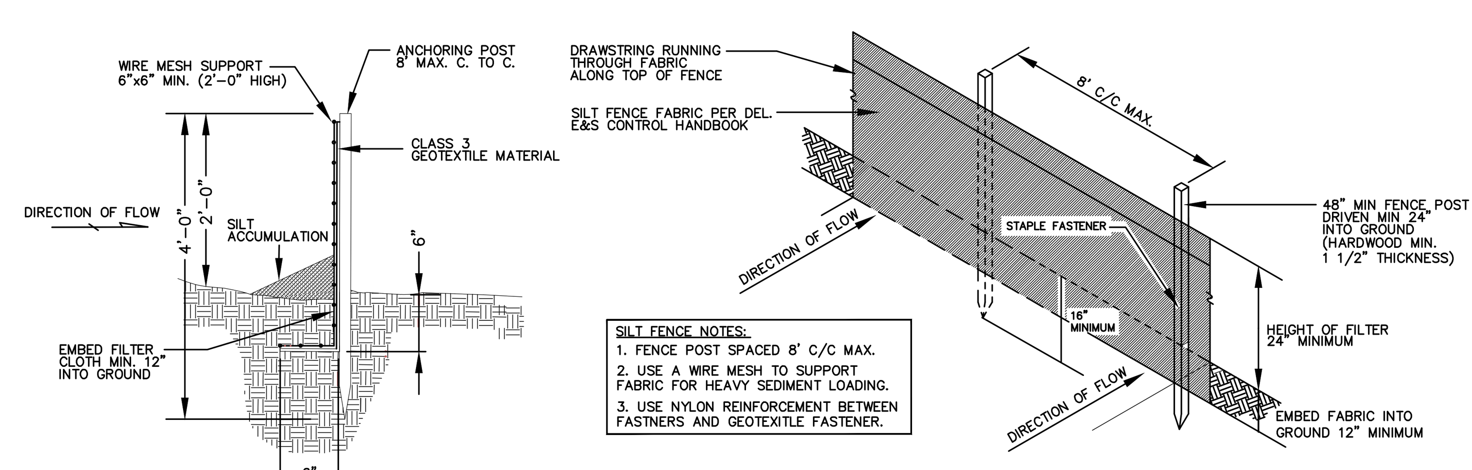

SILT FENCE NOTES:
1. FENCE POST SPACED 8' C/C MAX.
2. USE A WIRE MESH TO SUPPORT FABRIC FOR HEAVY SEDIMENT LOADING.
3. USE NYLON REINFORCEMENT BETWEEN FASTNERS AND GEOTEXITLE FASTENER.

TYPICAL SILT FENCE
N.T.S.

SOIL DE–COMPACTION AND TESTING REQUIREMENTS

SOIL COMPACTION TESTING REQUIREMENTS

1. SUBGRADE SOILS **PRIOR TO THE APPLICATION OF TOPSOIL** (SEE PERMANENT SEEDING AND STABILIZATION NOTES FOR TOPSOIL REQUIREMENTS) SHALL BE FREE OF EXCESSIVE COMPACTION TO A DEPTH OF 6.0 INCHES TO ENHANCE THE ESTABLISHMENT OF PERMANENT VEGETATIVE COVER.
2. AREAS OF THE SITE WHICH ARE SUBJECT TO COMPACTION TESTING AND/OR MITIGATION ARE **GRAPHICALLY DENOTED** ON THE CERTIFIED SOIL EROSION CONTROL PLAN.
3. **COMPACTION TESTING LOCATIONS** ARE DENOTED ON THE PLAN. A COPY OF THE PLAN OR PORTION OF THE PLAN SHALL BE USED TO MARK LOCATIONS OF TESTS, AND ATTACHED TO THE COMPACTION REMEDIATION FORM, AVAILABLE FROM THE LOCAL SOIL CONSERVATION DISTRICT. THIS FORM MUST BE FILLED OUT AND SUBMITTED PRIOR TO RECEIVING A CERTIFICATE OF COMPLIANCE FROM THE DISTRICT.
4. IN THE EVENT THAT TESTING INDICATED COMPACTION IN EXCESS OF THE MAXIMUM THRESHOLDS INDICATED FOR THE SIMPLIFIED TESTING METHODS (SEE DETAILS BELOW), THE CONTRACTOR/OWNER SHALL HAVE THE OPTION TO PERFORM EITHER (1) COMPACTION MITIGATION OVER THE ENTIRE MITIGATION AREA DENOTED ON THE PLAN (EXCLUDING EXEMPT AREAS), OR (2) PERFORM ADDITIONAL, MORE DETAILED TESTING TO ESTABLISH THE LIMITS OF EXCESSIVE COMPACTION WHEREUPON ONLY THE EXCESSIVELY COMPACTED AREAS WOULD REQUIRE COMPACTION MITIGATION. ADDITIONAL DETAILED TESTING SHALL BE PERFORMED BY A TRAINED, LICENSED PROFESSIONAL.

COMPACTION TESTING METHODS

A. PROBING WIRE TEST (SEE DETAIL)
B. HAND–HELD PENETROMETER TEST (SEE DETAIL)
C. TUBE BULK DENSITY TEST (LICENSED PROFESSIONAL ENGINEER REQUIRED)
N. NUCLEAR DENSITY TEST (LICENSED PROFESSIONAL ENGINEER REQUIRED)

NOTE: ADDITIONAL TESTING METHODS WHICH CONFORM TO ASTM STANDARDS AND SPECIFICATIONS, AND WHICH PRODUCE A DRY WEIGHT, SOIL BULK DENSITY MEASUREMENT MAY BE ALLOWED SUBJECT TO DISTRICT APPROVAL.

SOIL COMPACTION TESTING NOT REQUIRED IF/WHEN SUBSOIL COMPACTION REMEDIATION (SCARIFICATION/TILLAGE (6" MINIMUM DEPTH OR SIMILAR) IS PROPOSED AS PART OF SEQUENCE OF CONSTRUCTION.

PROCEDURES FOR SOIL COMPACTION MITIGATION

PROCEDURES SHALL BE USED TO MITIGATE EXCESSIVE SOIL COMPACTION **PRIOR TO PLACEMENT OF TOPSOIL** AND ESTABLISHMENT OF PERMANENT VEGETATIVE COVER.

RESTORATION OF COMPACTED SOILS SHALL BE THROUGH DEEP SCARIFICATION/TILLAGE (6" MINIMUM DEPTH) WHERE THERE IS NO DANGER TO UNDERGROUND UTILITIES (CABLES, IRRIGATION SYSTEMS, ETC.). IN THE ALTERNATIVE ANOTHER METHOD AS SPECIFIED BY A NEW JERSEY LICENSED PROFESSIONAL ENGINEER MAYBE SUBSTITUTED SUBJECT TO DISTRICT APPROVAL.

NOTE: SOIL SHOULD BE MOIST BUT NOT SATURATED. DO NOT TEST WHEN SOIL IS EXCESSIVELY DRY OR SUBJECT TO FREEZING TEMPERATURES. SLOW, STEADY DOWNWARD PRESSURE USED TO ADVANCE THE WIRE.

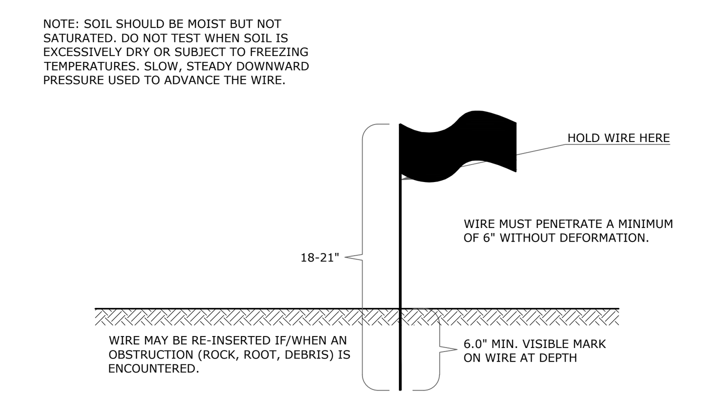

PROBING WIRE TEST – 15.5 GA STEEL WIRE (SURVEY FLAG)
N.T.S.

NOTE: SOIL SHOULD BE MOIST BUT NOT SATURATED. DO NOT TEST WHEN SOIL IS EXCESSIVELY DRY OR SUBJECT TO FREEZING TEMPERATURES. SLOW, STEADY DOWNWARD PRESSURE USED TO ADVANCE THE PROBE. PROBE MUST PENETRATE AT LEAST 6" WITH LESS THAN 300 PSI READING ON THE GAGE.

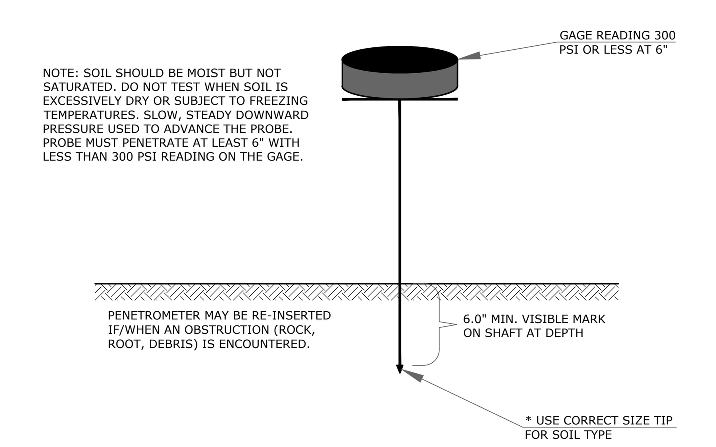

HANDHELD SOIL PENETROMETER TEST
N.T.S.

SCHEDULE OF REVISIONS

1.	03/08/2023	REVISED PER HPC MEETING	ENS	CJS

OWNER/APPLICANT
YESHIVA TIFERES BORUCH, INC.
112 LINDEN AVENUE
NORTH PLAINFIELD, NJ 07060

E 2 PROJECT MANAGEMENT LLC
87 HIBERNIA AVENUE
ROCKAWAY, N.J. 07866
PHONE: (973) 299-5200
FAX: (973) 299-5059
www.E2PM.com

THIS DRAWING DOES NOT INCLUDE NECESSARY COMPONENTS FOR CONSTRUCTION SAFETY. ALL CONSTRUCTION MUST BE DONE IN COMPLIANCE WITH THE OCCUPATIONAL SAFETY AND HEALTH ACT OF 1970 AND ALL RULES AND REGULATIONS THERETO APPURTENANT. THIS DRAWING AND THE DESIGN FEATURES OR CONSTRUCTION DISCLOSED ARE PROPRIETARY TO E2 PROJECT MANAGEMENT LLC AND SHALL NOT BE REPRODUCED, ALTERED OR COPIED WITHOUT WRITTEN PERMISSION, SHALL NOT BE USED IN ANY MANNER DETRIMENTAL TO ITS INTEREST AND SHALL BE RETURNED UPON REQUEST.

N.J. ENGINEERING CERTIFICATE OF AUTHORIZATION No. 24GA28118200

I CERTIFY THAT THESE PLANS HAVE BEEN PREPARED UNDER MY SUPERVISION

CHARLES J. STEWART, P.E., P.L.S. N.J. NO. 24GB03588400
REGISTERED PROFESSIONAL ENGINEER AND LAND SURVEYOR

PROJECT NAME

YESHIVA NEW ACADEMY BUILDING

TAX LOT 1
BLOCK 134

21 ROCKVIEW AVENUE
BOROUGH OF NORTH PLAINFIELD
SOMERSET COUNTY, NJ

DRAWING TITLE

SOIL EROSION AND SEDIMENT CONTROL DETAILS

CHECKED BY: CS	DRAWN BY: ENS
SCALE: AS NOTED	SHEET NO: 12 OF 15
PROJECT #: P-22-47-01	FIRST ISSUE: 8/24/2022

DRAWING NO.

C-100.00

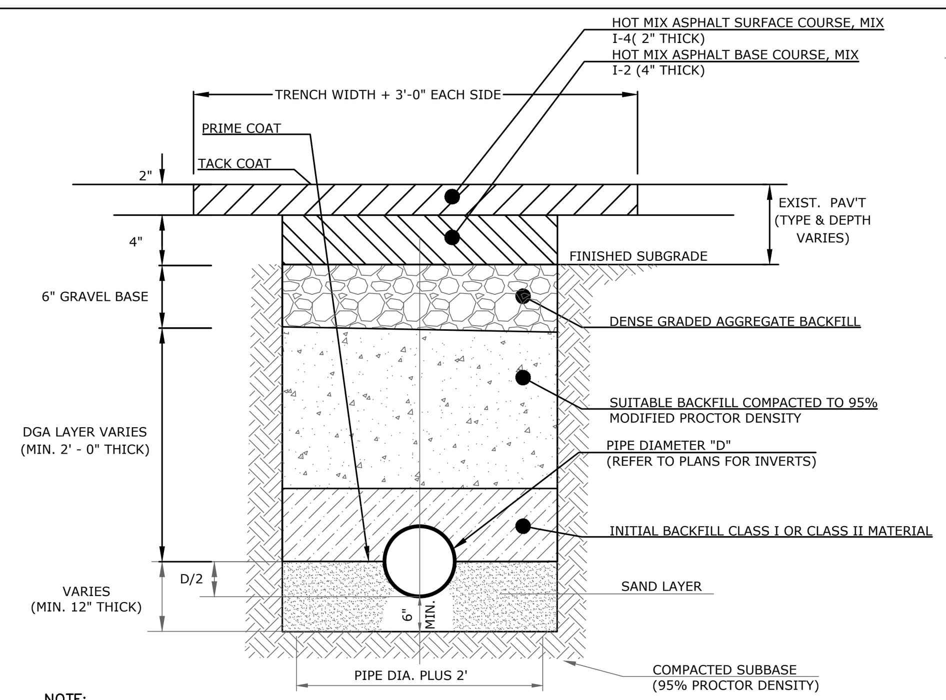

NOTE:

1. ASPHALT PAVEMENT BASED ON EQUIVALENT CBR OF 4 REQUIRES SIX (6) INCH MINIMUM BASE COURSE.
2. REPAIRS TO STREETS SHALL BE CITY OF PLAINFIELD REQUIREMENTS OR A MINIMUM THICKNESS AS SPECIFIED HEREIN.
3. REPAIR WIDTH & LENGTH (MILLING & PAVING) TO BE A MINIMUM OF 3' PAST TRENCH OPENING OR AS DETERMINED BY THE ENGINEER OR AS SHOWN ON THE PLANS
4. LIMITS OF TRENCH TO BE CUT TO A NEAT EDGE AND TACK-COATED WITH EMULSIFIED ASPHALT.
5. IN AREAS WITH WET OR UNSTABLE BOTTOMS US ¾" CLEAN BROKEN STONE TO STABILIZE TRENCH BOTTOM TO SOLID, STABLE FOUNDATION.
6. CONTRACTOR SHALL REPAIR ANY SETTLED ARES WITH STABILIZED BASE AFTER A SIX MONTH PERIOD OR ONE WINTER SEASON TO ENSURE NEW PAVEMENT SURFACE REMAINS FLUSH WITH EXISTING PAVEMENT.

1 / C-101 PIPE TRENCH (R.O.W.)

SCALE: N.T.S.

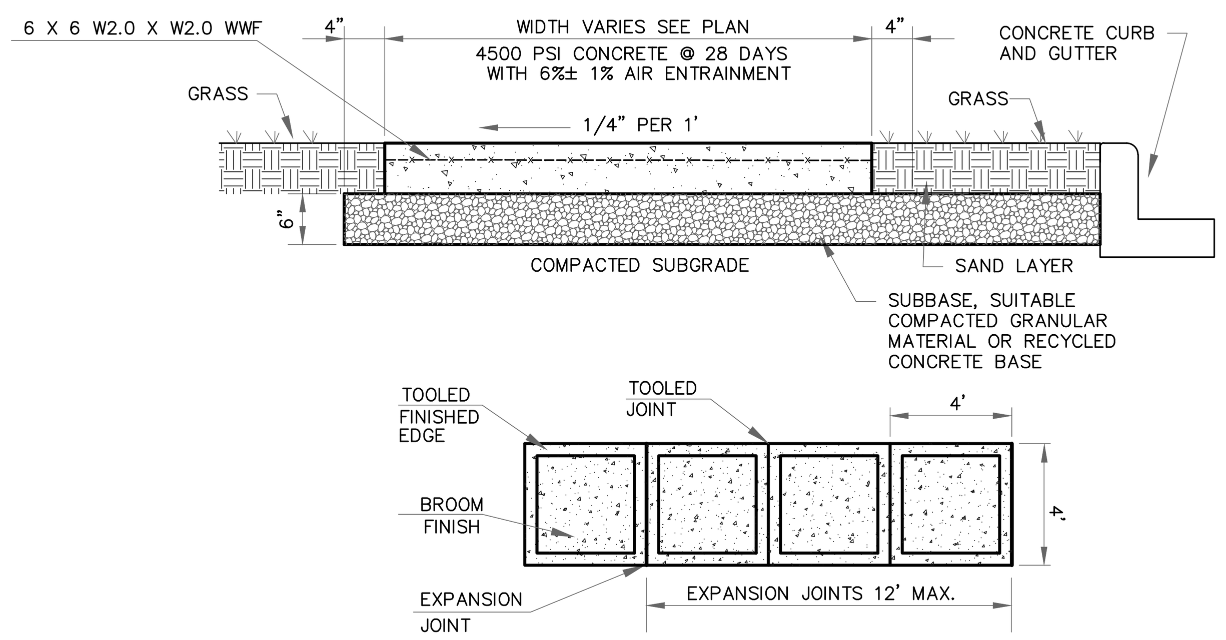

1. ANY CONCRETE PLACED BETWEEN NOVEMBER 15 AND APRIL 1 MUST CONFORM TO ARTICLES 501.11 AND 501.17 OF THE N.J.D.O.T. STANDARD SPECIFICATIONS FOR ROAD AND BRIDGE CONSTRUCTION, 1989 EDITION, USING 2% CALCIUM CHLORIDE, HOT WATER, COVERED W/SALT HAY.
2. WHERE SIDEWALK ABUTS CURBING, INSTALL EXPANSION JOINT BETWEEN CURB AND SIDEWALK ALONG ENTIRE LENGTH.
3. SLUMP TEST: 3"– 4".
4. EXPANSION JOINTS EVERY 12', CONSTRUCTION JOINTS EVERY 4' AT A DEPTH OF 1/4 THICKNESS OF CONCRETE.
5. ALL SIDEWALK MUST BE SPRAYED WITH WHITE PIGMENTED CURING COMPOUND AFTER BROOM FINISHING.

2 / C-101 SIDEWALK

SCALE: N.T.S.

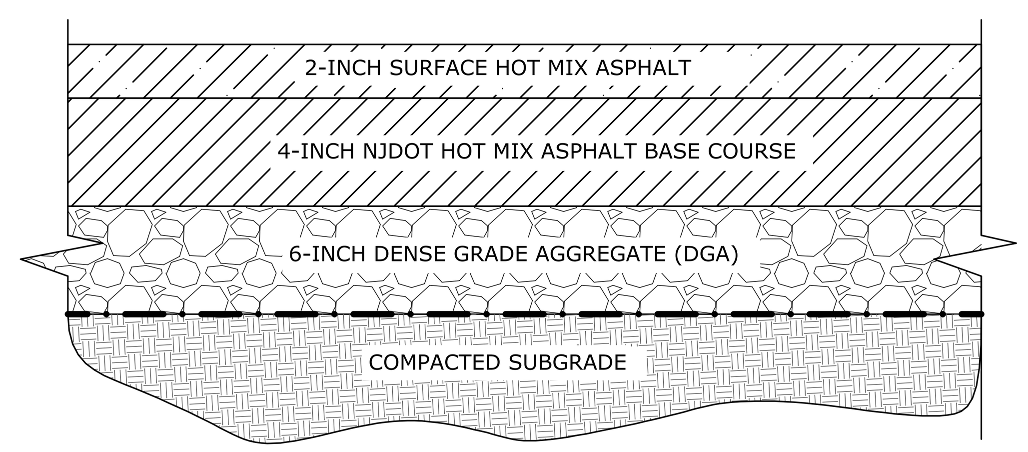

3 / C-101 ASPHALT PAVEMENT

SCALE: N.T.S.

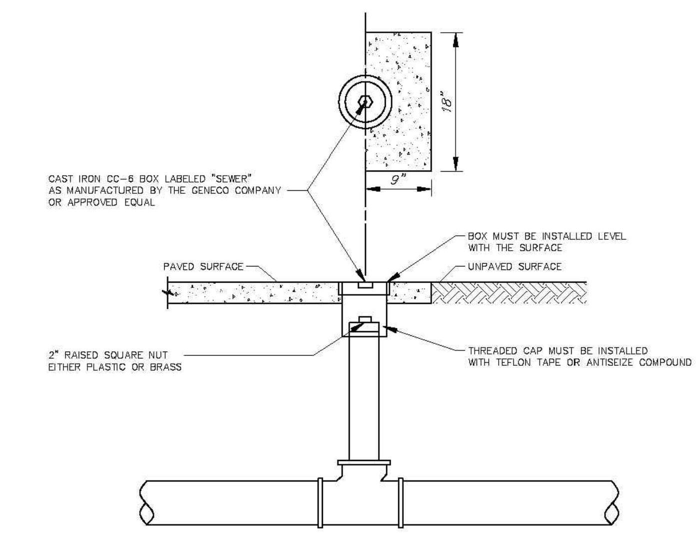

NOTES:

1. AT LEAST ONE CLEANOUT MUST BE PROVIDED ON EACH LATERAL.
2. A CLEANOUT WILL BE PROVIDED FOR EACH LATERAL BETWEEN THE CURB AND THE SIDEWALK.
3. IN GENERAL, OWNERSHIP AND MAINTENANCE OF LATERALS AND CLEANOUTS WILL BE THE RESPONSIBILITY OF THE PROPERTY OWNER.
4. THE LOCATION OF ALL CLEANOUTS MUST BE APPROVED BY THE TOWNSHIP PLUMBING DEPARTMENT.
5. ALL CLEANOUTS LOCATED WITHIN PAVEMENT OR CONCRETE MUST BE PROTECTED WITH A CC-6 BOX.

4 / C-101 CLEANOUT

SCALE: N.T.S.

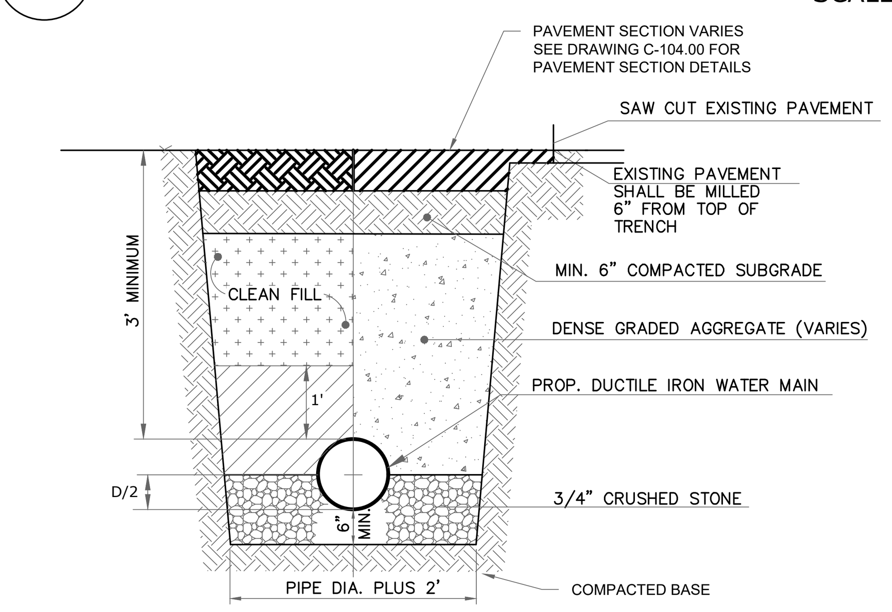

1. LIMITS OF TRENCH TO BE CUT TO A NEAT EDGE AND TACK-COATED WITH EMULSIFIED ASPHALT.
2. IN AREAS WITH WET OR UNSTABLE BOTTOMS USE 3/4" CLEAN BROKEN STONE TO STABILIZE TRENCH BOTTOM TO SOLID, STABLE FOUNDATION.
3. CONTRACTOR SHALL REPAIR ANY SETTLED AREAS WITH STABILIZED BASE AFTER A SIX MONTH PERIOD OR ONE WINTER SEASON TO ENSURE NEW PAVEMENT SURFACE REMAINS FLUSH WITH EXISTING PAVEMENT.
4. REFER TO DRAWING C-104.00 FOR PAVEMENT THICKNESS

4 / C-101 PIPE TRENCH (ON SITE)

SCALE: N.T.S.

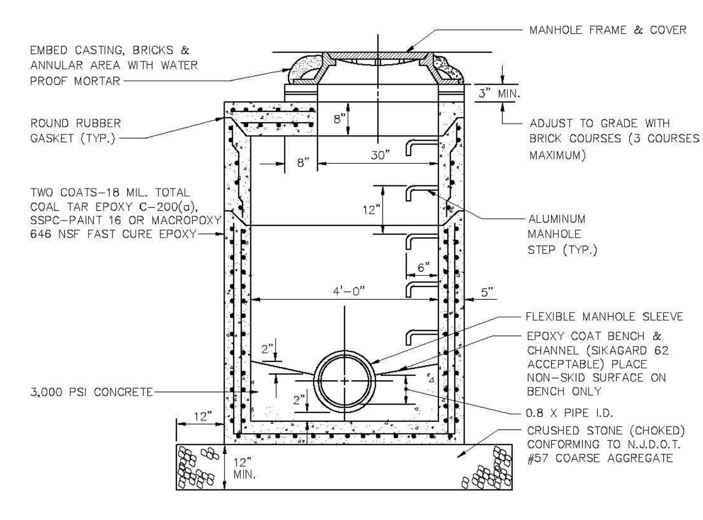

NOTES:

1. INTERIOR SURFACES TO BE COATED WITH TWO COATS, 18 MIL TOTAL, COAL TAR EPOXY MEETING SPECIFICATION C-200(A) OR SSPC-PAINT 16 IF RECEIVING DIRECT DISCHARGE FROM PUMP STATION OR DIFFERENCE IN INVERT ELEVATIONS EXCEEDS 12".
2. RISER, CONES AND SLABS SHALL BE CONSTRUCTED IN ACCORDANCE WITH A.S.T.M. C-478.
3. NON PENETRATING LIFTING HOLES SHALL BE PROVIDED IN ALL UNITS.
4. ABSORPTION NOT TO EXCEED 8% IN ACCORDANCE WITH A.S.T.M. C-76.
5. ALL JOINTS TO BE CONSTRUCTED IN ACCORDANCE WITH A.S.T.M. C-361.
6. NO PRE-CAST BENCHES OR CHANNELS
7. CAN ONLY BE USED AT DEPTHS GREATER THAN 6.5' AS MEASURED FROM RIM TO INVERT.

5 / C-101 SANITARY MANHOLE

SCALE: N.T.S.

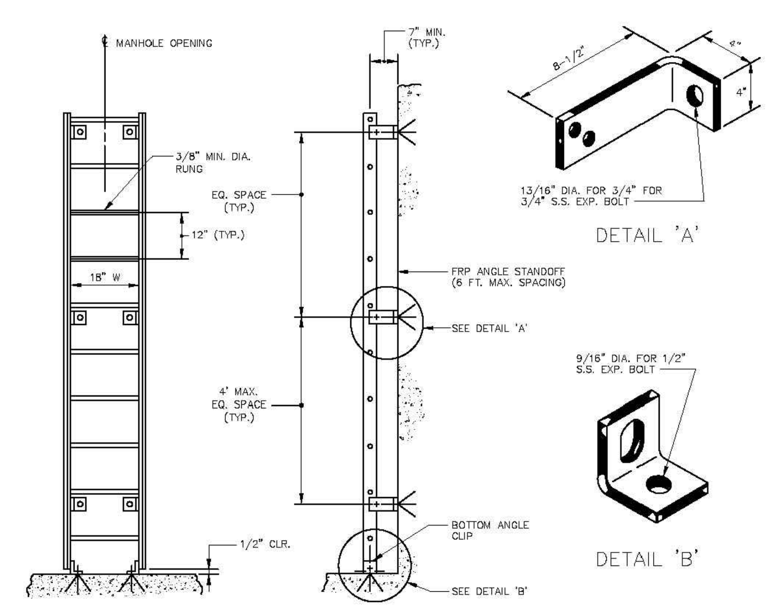

NOTES:

1. LADDERS SHALL BE INSTALLED ON ALL MANHOLES WHERE THE DISTANCE FROM THE INVERT TO THE RIM EXCEEDS 15 FEET.
2. LADDER SHALL BE FIBERGLASS.
3. CLIPS, ANGLES, BOLTS, WASHERS AND ALL OTHER HARDWARE SHALL BE 304 STAINLESS STEEL.
4. ALL MANHOLES EXCEEDING 25 FEET FROM INVERT TO RIM SHALL HAVE AT LEAST ONE INTERMEDIATE PLATFORM.

6 / C-101 FIBERGLASS MANHOLE LADDER

SCALE: N.T.S.

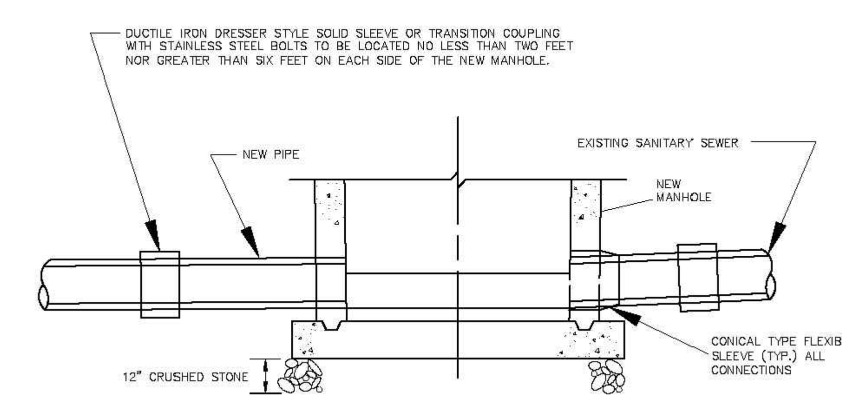

NOTES:

1. BENCH TO HAVE 2.0% SLOPE (TYP.) WITH NON SKID SURFACE.
2. ALL CONNECTIONS TO BE MADE WITH CONICAL TYPE FLEXIBLE SEAL SUCH AS KOR-N-SEAL OR EQUAL.
3. ALL CHANNELS MUST BE HALF PIPE OR EPOXY COATED.
4. THE MANHOLE MUST MEET ALL REQUIREMENTS FOR MANHOLE CONSTRUCTION SHOWN ON THE OTHER DETAILS OF THE AUTHORITY INCLUDING BUT NOT LIMITED TO THE REQUIREMENT FOR 12" OF CRUSHED STONE TO BE PLACED UNDER THE NEW MANHOLE.

7 / C-101 DOGHOUSE MANHOLE

SCALE: N.T.S.

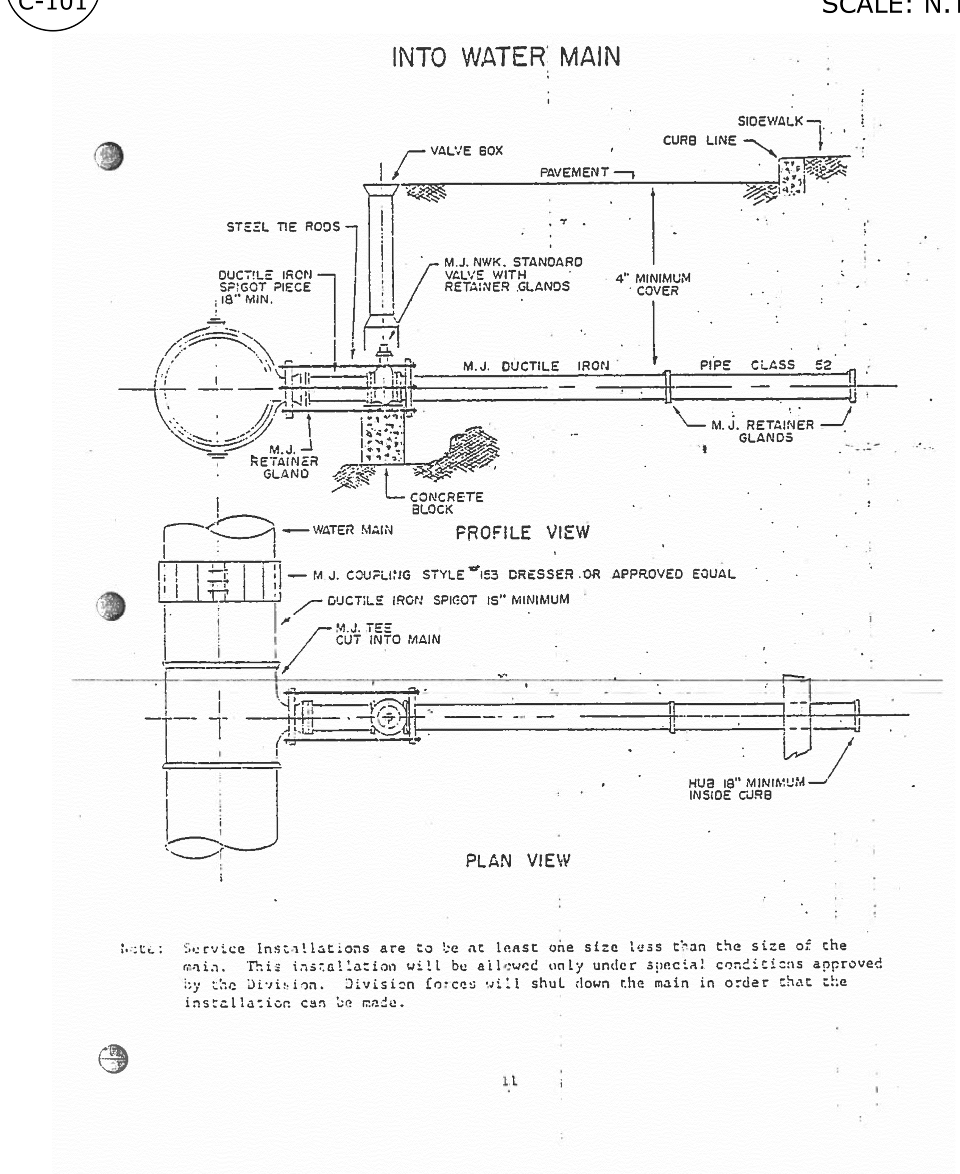

8 / C-101 WATER MAIN TAP

SCALE: N.T.S.

SCHEDULE OF REVISIONS

1.	03/08/2023	REVISED PER HPC MEETING	ENS	CJS

OWNER/APPLICANT
YESHIVA TIFERES BORUCH, INC.
112 LINDEN AVENUE
NORTH PLAINFIELD, NJ 07060

E 2 PROJECT MANAGEMENT LLC

87 HIBERNIA AVENUE
ROCKAWAY, N.J. 07866
PHONE: (973) 299-5200
FAX: (973) 299-5059
www.E2PM.com

THIS DRAWING DOES NOT INCLUDE NECESSARY COMPONENTS FOR CONSTRUCTION SAFETY. ALL CONSTRUCTION MUST BE DONE IN COMPLIANCE WITH THE OCCUPATIONAL SAFETY AND HEALTH ACT OF 1970 AND ALL RULES AND REGULATIONS THERETO APPURTENANT. THIS DRAWING AND THE DESIGN FEATURES OR CONSTRUCTION DISCLOSED ARE PROPRIETARY TO E2 PROJECT MANAGEMENT LLC AND SHALL NOT BE REPRODUCED, ALTERED OR COPIED WITHOUT WRITTEN PERMISSION, SHALL NOT BE USED IN ANY MANNER DETRIMENTAL TO ITS INTEREST AND SHALL BE RETURNED UPON REQUEST.

N.J. ENGINEERING CERTIFICATE OF AUTHORIZATION No. 24GA28118200

I CERTIFY THAT THESE PLANS HAVE BEEN PREPARED UNDER MY SUPERVISION

CHARLES J. STEWART, P.E., P.L.S. N.J. NO. 24GB03588400
REGISTERED PROFESSIONAL ENGINEER AND LAND SURVEYOR

PROJECT NAME

YESHIVA NEW ACADEMY BUILDING

TAX LOT 1
BLOCK 134

21 ROCKVIEW AVENUE
BOROUGH OF NORTH PLAINFIELD
SOMERSET COUNTY, NJ

DRAWING TITLE

CONSTRUCTION DETAILS

CHECKED BY: CS	DRAWN BY: ENS
SCALE: AS NOTED	SHEET NO: 13 OF 15
PROJECT #: P-22-47-01	FIRST ISSUE: 8/24/2022

DRAWING NO.

C-101.00

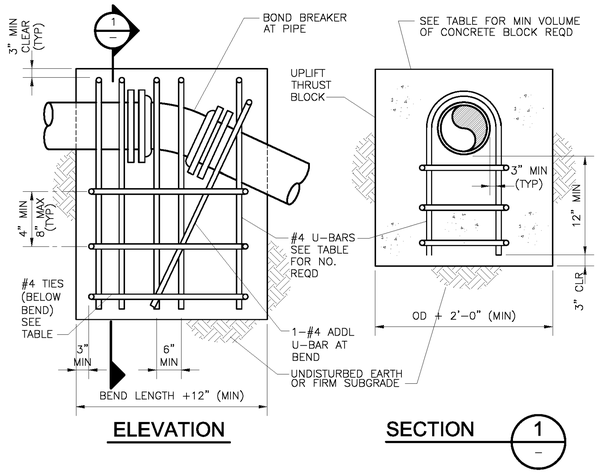

PIPE SIZE (IN.)	PIPE O.D. (IN.)	60 DEG		45 DEG		30 DEG		22.5 DEG		#4 TIES REQD
		REINF	CONC	REINF	CONC	REINF	CONC	REINF	CONC	
3	3.96	2	1	2	0.5	2	0.5	2	0.5	2
4	4.80	2	1	2	1.0	2	0.5	2	0.5	2
6	6.90	2	2	2	1.5	2	1.0	2	1.0	2
8	9.05	2	3.5	2	3	2	2	2	1.5	2
10	11.10	2	5	2	4	2	3	2	2.0	2
12	13.20	3	7	3	6	2	4	2	3	2
14	15.30	4	9	4	7	3	5	2	4	4
16	17.40	6	12	5	10	3	7	3	5	4
18	19.50	7	15	6	12	4	9	3	7	4

NOTES:

1. "REINF" = NO. OF #4-U-BARS REQUIRED.
2. "CONCRETE" = VOLUME OF CONCRETE BLOCK REQUIRED, CU YD.
3. MAXIMUM TEST PRESSURE = 1.50x1.50 PSI.
4. MINIMUM GRADE 40 REBAR.

1 / C-102 CONCRETE THRUSTBLOCK FOR VERTICAL BENDS

SCALE: N.T.S.

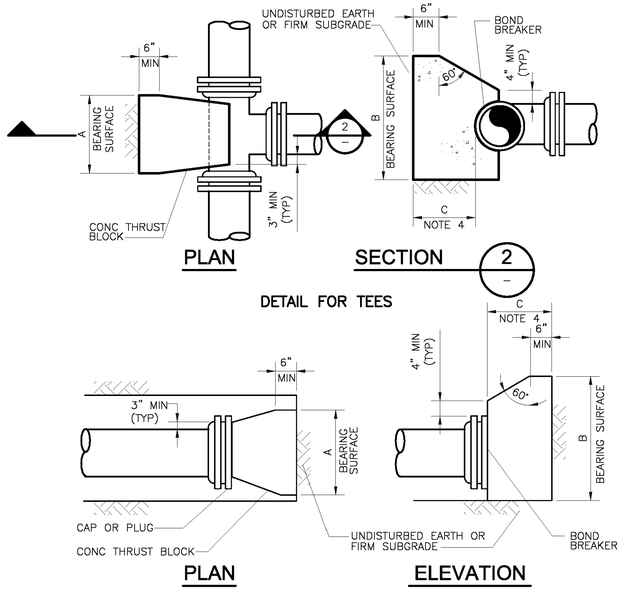

NOMINAL PIPE SIZE (IN)	MAXIMUM PIPE OD (IN)	REQUIRED BEARING AREA (SQ FT)
3	3.96	1.4
4	4.80	2.0
6	6.90	4
8	9.05	7
10	11.10	11
12	13.20	15
14	15.30	21
16	17.40	27
18	19.50	34
20	21.60	41
24	25.80	59
30	32.00	90
36	38.30	130

NOTES:

1. MAXIMUM TEST PRESURE = 1.50x150 PSI
2. MINIMUM ALLOWABLE SOIL BEARING PRESSURE = 2000 PSF
3. BEARING AREA = A x B
4. C SHALL BE GREATER THAN A/2 AND B/2.

2 / C-102 CONCRETE THRUSTBLOCK FOR TEES CAPS AND PLUGS

SCALE: N.T.S.

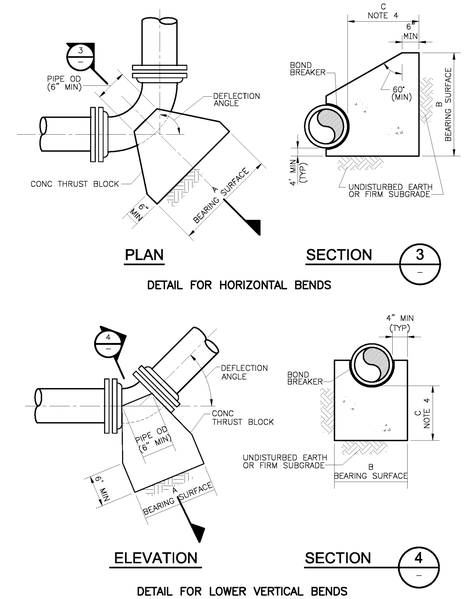

NOMINAL PIPE SIZE (INCHES)	MAXIMUM PIPE OD (INCHES)	REQUIRED BEARING AREA (SQ FT)					
		90 DEG	60 DEG	45 DEG	30 DEG	22.50 DEG	11.25 DEG
3	3.96	2.0	1.4	1.1	0.7	0.5	0.3
4	4.80	2.9	2.0	1.6	1.1	0.8	0.4
6	6.90	6	4	3	2.2	1.6	0.8
8	9.05	10	7	6	4	3	1.4
10	11.10	15	11	8	6	4	2.1
12	13.20	22	15	12	8	6	3
14	15.30	29	21	16	11	8	4
16	17.40	38	27	20	14	10	5
18	19.50	48	34	26	17	13	7
20	21.60	58	41	32	21	16	8
24	25.80	83	59	45	30	23	12
30	32.00	128	90	69	47	35	18
36	38.30	183	130	99	67	51	25

THRUST BLOCKS FOR HORIZONTAL BENDS AND LOWER VERTICAL BENDS

NOTES:

1. MAXIMUM TEST PRESURE = 1.5 x 150 PSI
2. MINIMUM ALLOWABLE SOIL BEARING PRESSURE = 2000 PSF
3. BEARING AREA = A x B
4. C SHALL BE GREATER THAN A/2 AND B/2.

3 / C-102 CONCRETE THRUSTBLOCK FOR HORIZONTAL BENDS

SCALE: N.T.S.

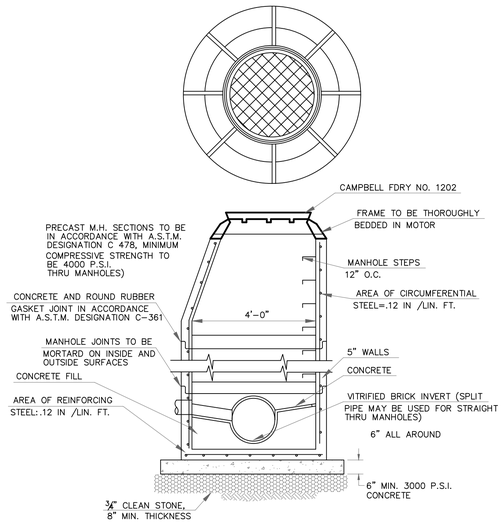

NOTES:

1. ½" COAT OF CEMENT MORTAR ON EXTERIOR AND PAINTED WITH BITUMASTIC PAINT.
2. INTERIOR TO BE RUBBED FINISH OR NEATLY STRUCK JOINTS.
3. MANHOLE COVERS SHALL BE CAST WITH THE WORDS SANITARY SEWER.
4. COVERS SHALL HAVE NON-PENETRATING PICKHOLES AND NO VENT HOLES.

4 / C-102 STORM MANHOLE

SCALE: N.T.S.

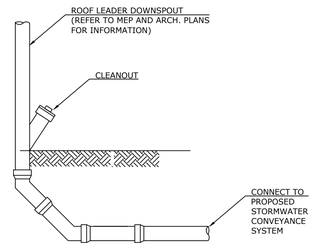

5 / C-102 STORM ROOFLEADER AND CLEANOUT

SCALE: N.T.S.

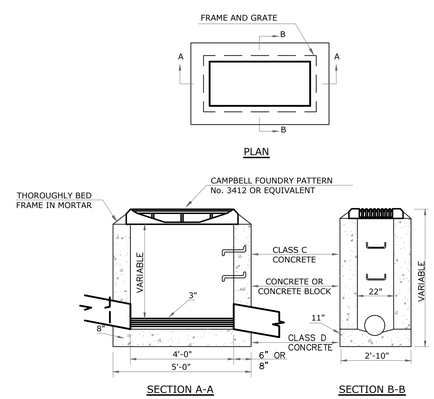

6 / C-102 TYPE 'A' INLET

SCALE: N.T.S.

SCHEDULE OF REVISIONS

1.	03/08/2023	REVISED PER HPC MEETING	ENS	CJS

OWNER/APPLICANT

YESHIVA TIFERES BORUCH, INC.
112 LINDEN AVENUE
NORTH PLAINFIELD, NJ 07060

E 2 PROJECT MANAGEMENT LLC

87 HIBERNIA AVENUE
ROCKAWAY, N.J. 07866
PHONE: (973) 299-5200
FAX: (973) 299-5059
www.E2PM.com

THIS DRAWING DOES NOT INCLUDE NECESSARY COMPONENTS FOR CONSTRUCTION SAFETY. ALL CONSTRUCTION MUST BE DONE IN COMPLIANCE WITH THE OCCUPATIONAL SAFETY AND HEALTH ACT OF 1970 AND ALL RULES AND REGULATIONS THERETO APPURTENANT. THIS DRAWING AND THE DESIGN FEATURES OR CONSTRUCTION DISCLOSED ARE PROPRIETARY TO E2 PROJECT MANAGEMENT LLC AND SHALL NOT BE REPRODUCED, ALTERED OR COPIED WITHOUT WRITTEN PERMISSION, SHALL NOT BE USED IN ANY MANNER DETRIMENTAL TO ITS INTEREST AND SHALL BE RETURNED UPON REQUEST.

N.J. ENGINEERING CERTIFICATE OF AUTHORIZATION No. 24GA28118200

I CERTIFY THAT THESE PLANS HAVE BEEN PREPARED UNDER MY SUPERVISION

CHARLES J. STEWART, P.E., P.L.S. N.J. NO. 24GB03588400
REGISTERED PROFESSIONAL ENGINEER AND LAND SURVEYOR

PROJECT NAME

YESHIVA NEW ACADEMY BUILDING

TAX LOT 1
BLOCK 134

21 ROCKVIEW AVENUE
BOROUGH OF NORTH PLAINFIELD
SOMERSET COUNTY, NJ

DRAWING TITLE

CONSTRUCTION DETAILS

CHECKED BY: CS	DRAWN BY: ENS
SCALE: AS NOTED	SHEET NO: 14 OF 15
PROJECT #: P-22-47-01	FIRST ISSUE: 8/24/2022

DRAWING NO.

C-102.00

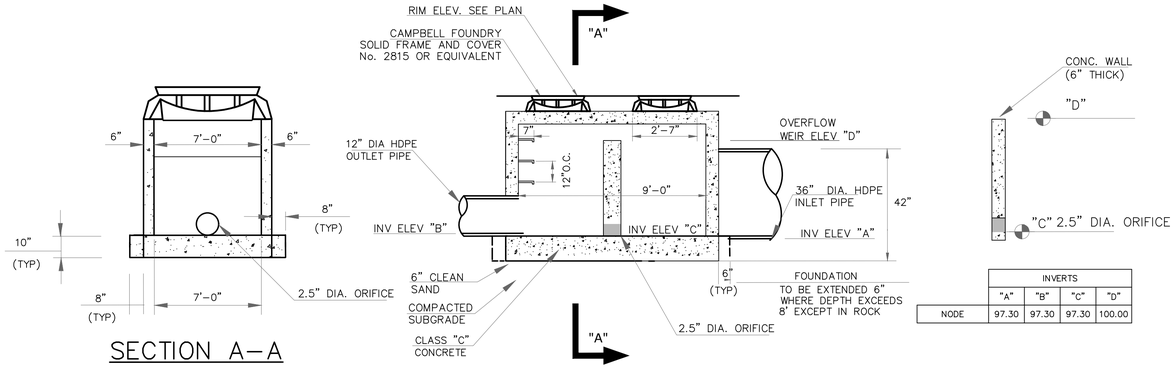

	INVERTS			
	"A"	"B"	"C"	"D"
NODE	97.30	97.30	97.30	100.00

1 C-103 OUTLET CONTROL STRUCTURE-1

SCALE: N.T.S.

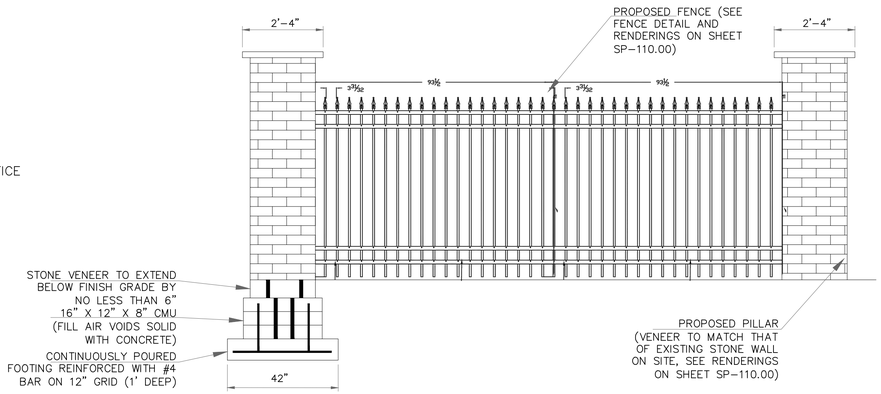

2 C-103 FENCE WITH PILLAR DETAIL

SCALE: N.T.S.

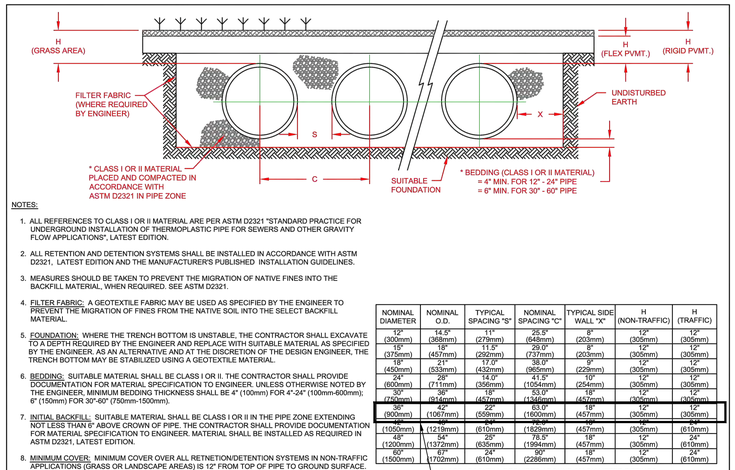

NOTES:

1. ALL REFERENCES TO CLASS I OR II MATERIAL ARE PER ASTM D2321 "STANDARD PRACTICE FOR UNDERGROUND INSTALLATION OF THERMOPLASTIC PIPE FOR SEWERS AND OTHER GRAVITY FLOW APPLICATIONS", LATEST EDITION.
2. ALL RETENTION AND DETENTION SYSTEMS SHALL BE INSTALLED IN ACCORDANCE WITH ASTM D2321, LATEST EDITION AND THE MANUFACTURER'S PUBLISHED INSTALLATION GUIDELINES.
3. MEASURES SHOULD BE TAKEN TO PREVENT THE MIGRATION OF NATIVE FINES INTO THE BACKFILL MATERIAL, WHEN REQUIRED. SEE ASTM D2321.
4. FILTER FABRIC: A GEOTEXTILE FABRIC MAY BE USED AS SPECIFIED BY THE ENGINEER TO PREVENT THE MIGRATION OF FINES FROM THE NATIVE SOIL INTO THE SELECT BACKFILL MATERIAL.
5. FOUNDATION: WHERE THE TRENCH BOTTOM IS UNSTABLE, THE CONTRACTOR SHALL EXCAVATE TO A DEPTH REQUIRED BY THE ENGINEER AND REPLACE WITH SUITABLE MATERIAL AS SPECIFIED BY THE ENGINEER. AS AN ALTERNATIVE AND AT THE DISCRETION OF THE DESIGN ENGINEER, THE TRENCH BOTTOM MAY BE STABILIZED USING A GEOTEXTILE MATERIAL.
6. BEDDING: SUITABLE MATERIAL SHALL BE CLASS I OR II. THE CONTRACTOR SHALL PROVIDE DOCUMENTATION FOR MATERIAL SPECIFICATION TO ENGINEER. UNLESS OTHERWISE NOTED BY THE ENGINEER, MINIMUM BEDDING THICKNESS SHALL BE 4" (100mm) FOR 4"-24" (100mm-600mm); 6" (150mm) FOR 30"-60" (750mm-1500mm).
7. INITIAL BACKFILL: SUITABLE MATERIAL SHALL BE CLASS I OR II IN THE PIPE ZONE EXTENDING NOT LESS THAN 6" ABOVE CROWN OF PIPE. THE CONTRACTOR SHALL PROVIDE DOCUMENTATION FOR MATERIAL SPECIFICATION TO ENGINEER. MATERIAL SHALL BE INSTALLED AS REQUIRED IN ASTM D2321, LATEST EDITION.
8. MINIMUM COVER: MINIMUM COVER OVER ALL RETNETION/DETENTION SYSTEMS IN NON-TRAFFIC APPLICATIONS (GRASS OR LANDSCAPE AREAS) IS 12" FROM TOP OF PIPE TO GROUND SURFACE. ADDITIONAL COVER MAY BE REQUIRED TO PREVENT FLOATATION. FOR TRAFFIC APPLICATIONS, MINIMUM COVER IS 12" UP TO 36" DIAMETER PIPE AND 24" OF COVER FOR 42" - 60" DIAMETER PIPE, MEASURED FROM TOP OF PIPE TO BOTTOM OF FLEXIBLE PAVEMENT OR TO TOP OF RIGID PAVEMENT.

© 2016 ADS, INC.

NOMINAL DIAMETER	NOMINAL O.D.	TYPICAL SPACING "S"	NOMINAL SPACING "C"	TYPICAL SIDE WALL "X"	H (NON-TRAFFIC)	H (TRAFFIC)
12" (300mm)	14.5" (368mm)	11" (279mm)	25.5" (648mm)	8" (203mm)	12" (305mm)	12" (305mm)
15" (375mm)	18" (457mm)	11.5" (292mm)	29.0" (737mm)	8" (203mm)	12" (305mm)	12" (305mm)
18" (450mm)	21" (533mm)	17.0" (432mm)	38.0" (965mm)	9" (229mm)	12" (305mm)	12" (305mm)
24" (600mm)	28" (711mm)	14.0" (356mm)	41.5" (1054mm)	10" (254mm)	12" (305mm)	12" (305mm)
30" (750mm)	36" (914mm)	18" (457mm)	53.0" (1346mm)	18" (457mm)	12" (305mm)	12" (305mm)
36" (900mm)	42" (1067mm)	22" (559mm)	63.0" (1600mm)	18" (457mm)	12" (305mm)	12" (305mm)
42" (1050mm)	48" (1219mm)	24" (610mm)	64.0" (1629mm)	18" (457mm)	12" (305mm)	24" (610mm)
48" (1200mm)	54" (1372mm)	25" (630mm)	78.5" (1994mm)	18" (457mm)	12" (305mm)	24" (610mm)
60" (1500mm)	67" (1702mm)	24" (610mm)	90" (2286mm)	18" (457mm)	12" (305mm)	24" (610mm)

* CLASS I BACKFILL REQUIRED AROUND 60" DIAMETER FITTINGS.

SUBSURFACE INFILTRATION BASIN PIPING TO BE COMPRISED OF 36" DIAMETER PERFORATED HDPE PIPE

3 C-103 ADS INFILTRATION BASIN

SCALE: N.T.S.

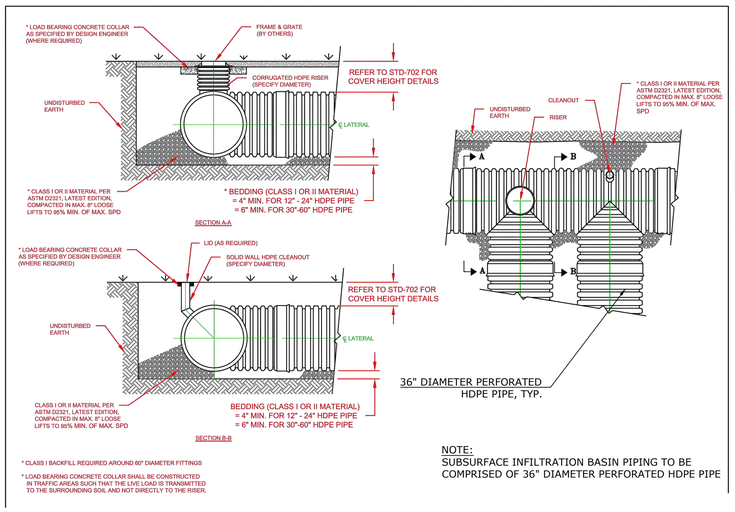

NOTE:
SUBSURFACE INFILTRATION BASIN PIPING TO BE COMPRISED OF 36" DIAMETER PERFORATED HDPE PIPE

4 C-103 ADS INFILTRATION BASIN RISER

SCALE: N.T.S.

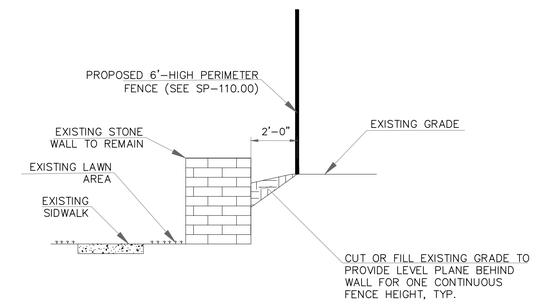

5 C-103 FENCE WALL SECTION DETAIL

SCALE: N.T.S.

SCHEDULE OF REVISIONS

1.	03/08/2023	REVISED PER HPC MEETING	ENS	CJS

OWNER/APPLICANT
YESHIVA TIFERES BORUCH, INC.
112 LINDEN AVENUE
NORTH PLAINFIELD, NJ 07060

E 2 PROJECT MANAGEMENT LLC

87 HIBERNIA AVENUE
ROCKAWAY, N.J. 07866
PHONE: (973) 299-5200
FAX: (973) 299-5059
www.E2PM.com

THIS DRAWING DOES NOT INCLUDE NECESSARY COMPONENTS FOR CONSTRUCTION SAFETY. ALL DESIGNS SHOWN ARE SUBJECT TO THE PROTECTIONS AFFORDED BY THE COPYRIGHT LAWS OF THE ACT OF 1970 AND ALL RULES AND REGULATIONS THERETO APPURTENANT. THIS DRAWING AND THE DESIGN FEATURES OR CONSTRUCTION DISCLOSED ARE PROPRIETARY TO E2 PROJECT MANAGEMENT LLC AND SHALL NOT BE REPRODUCED, ALTERED OR COPIED WITHOUT WRITTEN PERMISSION, SHALL NOT BE USED IN ANY MANNER DETRIMENTAL TO ITS INTEREST AND SHALL BE RETURNED UPON REQUEST.

N.J. ENGINEERING CERTIFICATE OF AUTHORIZATION No. 24GA28118200

I CERTIFY THAT THESE PLANS HAVE BEEN PREPARED UNDER MY SUPERVISION

CHARLES J. STEWART, P.E., P.L.S. N.J. NO. 24GB03588400
REGISTERED PROFESSIONAL ENGINEER AND LAND SURVEYOR

PROJECT NAME

YESHIVA NEW ACADEMY BUILDING

TAX LOT 1
BLOCK 134

21 ROCKVIEW AVENUE
BOROUGH OF NORTH PLAINFIELD
SOMERSET COUNTY, NJ

DRAWING TITLE

CONSTRUCTION DETAILS

CHECKED BY: CS	DRAWN BY: ENS
SCALE: AS NOTED	SHEET NO: 15 OF 15
PROJECT #: P-22-47-01	FIRST ISSUE: 8/24/2022

DRAWING NO.

C-103.00